Woodsmith®

**EXCLUSIVE Triple Bonus**

*See Back Cover for Details*

# MUST-HAVE HAND TOOLS™

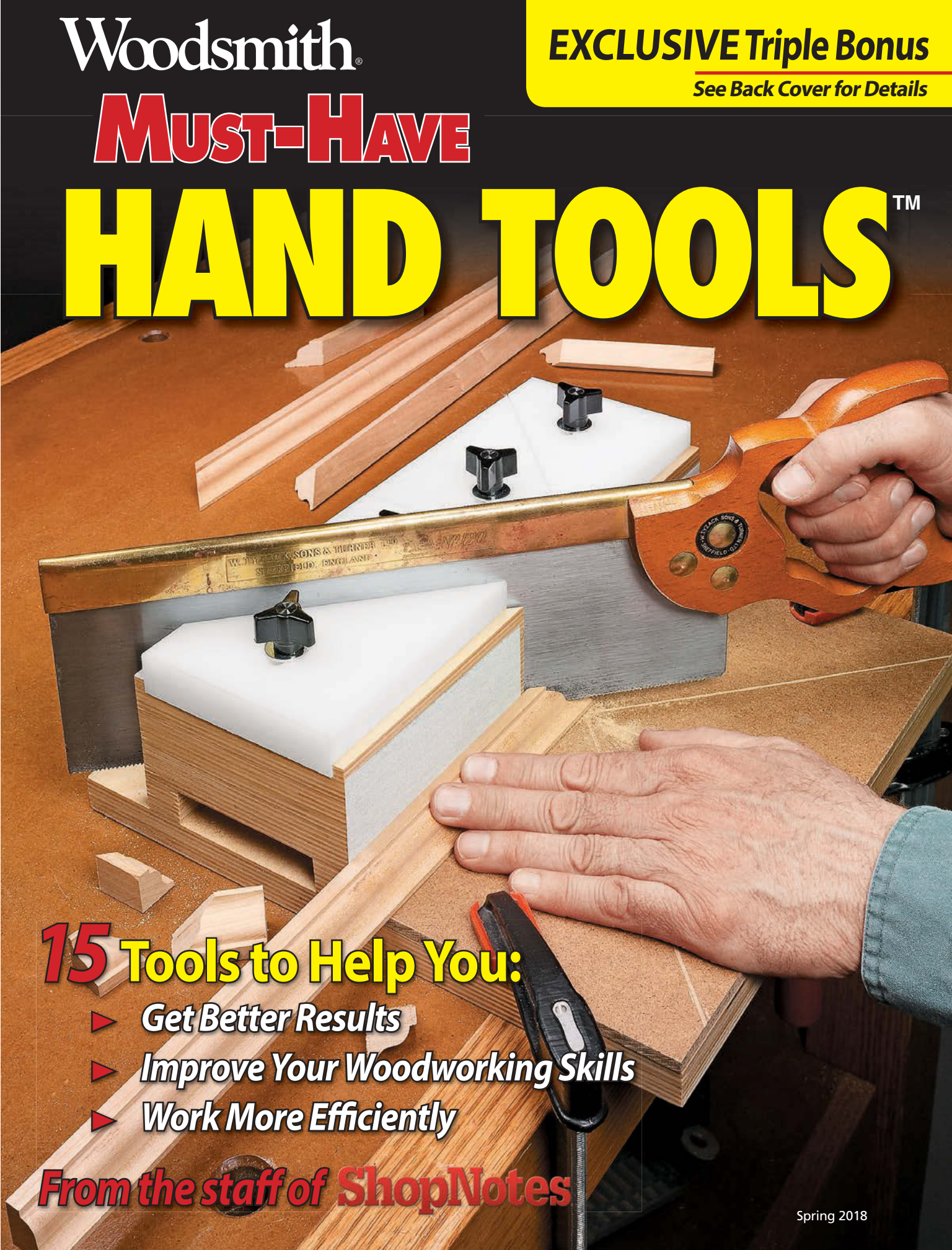

## 15 Tools to Help You:

- *Get Better Results*
- *Improve Your Woodworking Skills*
- *Work More Efficiently*

*From the staff of* ShopNotes

Spring 2018

# MUST-HAVE HAND TOOLS™

Creative Home Group

Editor: Vincent Ancona
Multimedia Editor: Phil Huber
Associate Editor: Robert Kemp
Assistant Editors: Erich Lage, Logan Wittmer

Executive Art Director: Todd Lambirth
Senior Graphic Designer: Bob Zimmerman
Senior Illustrators: Dirk Ver Steeg,
Harlan V. Clark, Peter J. Larson
Graphic Designer: Becky Kralicek

Creative Director: Chris Fitch
Project Designers: Dennis Volz, Dillon Baker
Project Designer/Builder: John Doyle
CAD Specialist: Steve Johnson
Shop Craftsman: Dana Myers

Senior Photographer: Crayola England
Associate Style Director: Rebecca Cunningham
Senior Electronic Image Specialist: Allan Ruhnke
Production Assistant: Minniette Johnson

Publisher: Steven Nordmeyer
Founding Editor: Donald B. Peschke

Must-Have Hand Tools is published
by Cruz Bay Publishing, Inc.
2143 Grand Ave., Des Moines, IA 50312
Canada Post Agreement 40038201.
Canada BN 82564 2911.
©Copyright 2017 Cruz Bay Publishing, Inc.
All rights reserved. No part of this book may be reproduced in any form or by any electronic or mechanical means, including information storage and retrieval devices or systems, without prior written permission from the publisher, except that brief passages may be quoted for reviews.

Woodsmith® is a registered trademark of
Cruz Bay Publishing, Inc.

For subscription information about
Woodsmith, visit us online at:
Woodsmith.com or call (800) 333-5075

A Supplement to Cruz Bay Publishing, Inc.
Printed in U.S.A.

ACTIVE INTEREST MEDIA

PRESIDENT & CEO **Andrew W. Clurman**
SENIOR VICE PRESIDENT, TREASURER & CFO **Michael Henry**
CHIEF INNOVATION OFFICER **Jonathan Dorn**
VICE PRESIDENT, AUDIENCE DEVELPMENT **Tom Masterson**
VICE PRESIDENT, CONTROLLER **Joseph Cohen**
VICE PRESIDENT, RESEARCH **Kristy Kaus**
BOULDER HR DIRECTOR **JoAnne Thomas**

## contents

### SHOP SAFETY IS YOUR RESPONSIBILITY

Using hand or power tools improperly can result in serious injury or death. Do not operate any tool until you read the manual and understand how to operate the tool safely. Always use all appropriate safety equipment as well as the guards that come with your tools and equipment and read the manuals that accompany them. In some of the illustrations in this book, the guards and safety equipment have been removed only to provide a better view of the operation. Do not attempt any procedure without using all appropriate safety equipment or without ensuring that all guards are in place. Cruz Bay Publishing, Inc. assumes no responsibility for any injury, damage, or loss suffered as a result of your use of the material, plans, or illustrations contained in this book.

# cutting & Shaping Tools

4


**Heirloom Back Saw 6**
Making your own hand saw is easier than you think. With a few simple techniques, you'll create a high-quality, heirloom tool.

**Custom Scraper Shaves 10**
Get a glass-smooth surface ready for a finish with these custom hand tools. Five profiles will meet almost any challenge.

**Infill Smoothing Plane 16**
Beauty and utility come together in this great-looking plane. It's the perfect project to showcase your craftsmanship.

**Traditional Scratch Stock 24**
This shop-made tool is the key to adding decorative details to your projects. Build it in the morning and use it in the afternoon.

**Basic Hand Plane 28**
There's nothing complicated about making your own hand plane. Start with a special blade-set and build the plane around it.

**Custom Sanding Block 34**
No shop is complete without this sanding block. It keeps a firm grip on your sandpaper and easily fits into tight corners.

**Handsaw Miter Box 36**
It's often easier to work small parts by hand. This handsaw miter box gives you the ability to make accurate cuts.


# layout Tools

40


**Precision Miter Square 42**
All it takes is a pleasant afternoon in the shop to build an accurate miter square that you'll be using for years.

**Shop-Made Marking Knife 46**
You're sure to get a better grip on your layouts with this shop-made handle for a Japanese-style marking knife

**Multipurpose Layout Tool 50**
This shop-made tool allows you to transform a simple piece of T-track to create three layout tools in one.

**Calipers & Dividers Set 54**
A perfect layout is a snap with these dividers, compass, and calipers. The metalwork is easy and the results are stunning.

**Classic Marking Gauge 60**
Build a traditional marking gauge — with a twist. Made of maple and brass, it features two ways to make precision layouts.


# shop Accessories

66


**The Best Bench Vise 68**
This benchtop vise is the best way to solve the problem of holding odd-shaped workpieces at a comfortable height.

**Ultimate Shooting Board 76**
With a hand plane and this trimming jig, you can easily master any miter. It's sure to raise your craftsmanship to a new level.

**Restoring a Bench Plane 82**
Turn an old rusty bench plane into a hard-working tool. We also include instructions for making a new handle and knob.

**Saw Blade Filing Jig 86**
Sharpening a fine saw blade doesn't have to be an intimidating task. This clever jig makes it a simple process.

**Tri-Fold Drill Bit Index 90**
Based on a classic design, this portable index is a super solution for keeping your most-used drill bits close at hand.

**Sharpening a Plane Iron 96**
Try your hand at sharpening a plane iron without a honing guide. Here's a simple and fast technique for a razor-sharp edge.

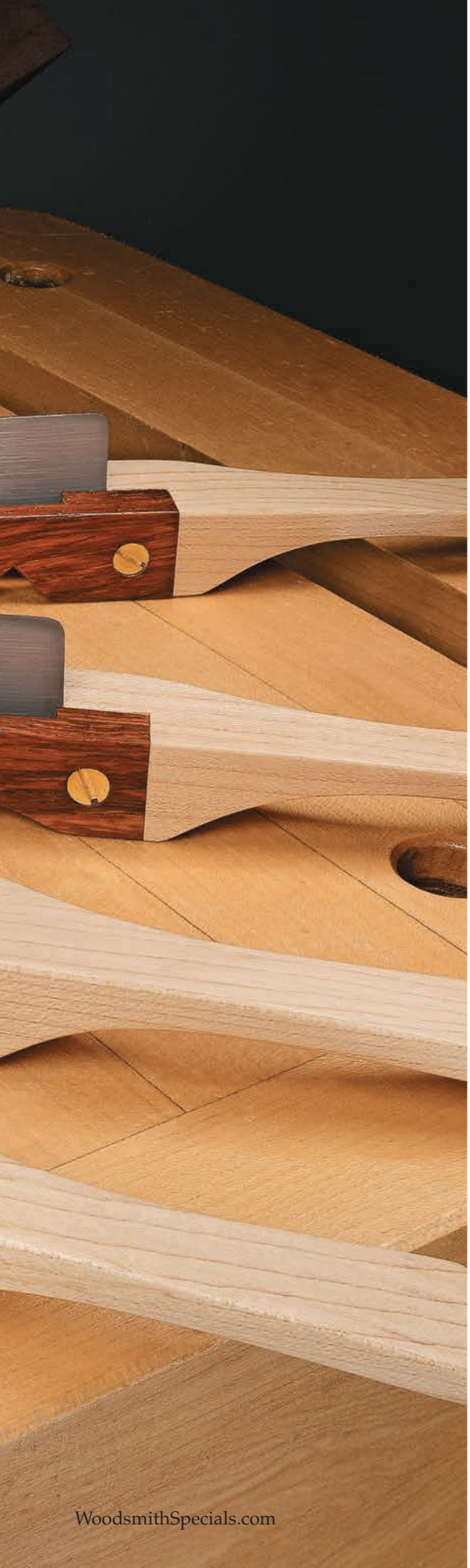

# Cutting & Shaping Tools

Cutting and shaping wood is the cornerstone of successful woodworking. Make these tasks much easier with a few shop-made tools. These heirloom pieces are sure to last a lifetime.


HEIRLOOM BACK SAW .....6

CUSTOM SCRAPER SHAVES.....10

INFILL SMOOTHING PLANE.....16

TRADITIONAL SCRATCH STOCK.....24

BASIC HAND PLANE .....28

CUSTOM SANDING BLOCK.....34

HANDSAW MITER BOX.....36

# shop-made Back Saw

Get precision cuts with a shop-made back saw that has all the features of a quality heirloom tool.

There's something very satisfying about making your own tools. Over the years, I've made hand planes, wooden mallets, marking gauges, and other hand tools. Recently, I decided to tackle my biggest challenge yet — a back saw. What I learned is that the process isn't that difficult if approached one step at a time. Like many other projects, it's just a matter of finding the right materials and getting started.

Now, I know what you're thinking, "How do I create the teeth?" Don't worry. A simple, shop-made sharpening jig and a file take care of that. (To learn how to build the jig, turn to page 86.) If you decide to build your own saw, I think you'll agree it's well worth the effort.

# start with the **Blade**

One of the most important features of any fine hand saw is the blade. To make mine, I used a piece of tempered spring steel that I cut to size and sharpened myself. I'll get to making the teeth later, but for now I'll explain how to make the back saw blade from scratch.

I found all of the hardware and saw parts I used online or at a local hardware store. A pre-cut blade blank, a folded back, nuts, bolts, and files can also be bought online. (See Sources on page 98.)

**BLADE BLANK.** Starting from scratch means cutting a piece of steel down to size with a hacksaw, (drawing at right and the upper left photo below). I used a file to remove the rough spots left from sawing the blank and I also sanded away all of the bluing with an abrasive pad (upper right photo).

Once you have your blade cut to size and sanded, you can go ahead and sharpen the teeth. It's easy to do if you use the filing jig and follow the steps starting on page 86.

**MAKE THE BACK.** After forming the teeth, the next step is to make the back. The back prevents the saw from buckling during use. It's just a piece of solid brass that's "folded" along its length.

To do this, lay out a centerline on the brass and clamp it in a machinist's vise. Then, simply fold it in sections using a heavy-duty hammer. A piece of steel helps soften the blow and protects the brass from dents and scratches.

Work your way along the brass a little at a time, reclamping it in the vise as you go (lower left photo). Once you have the back folded 90° along its entire length, position it in the vise, as shown in the lower middle photo below. Then continue bending a little at a time by squeezing it between the vise jaws.

To complete the back, slip it over the blank and finish the bending (right photo). You want a snug fit, but the back should still slip off.

Finally, remove the back and file a shallow chamfer along the bottom and front edges (Figures 1 and 1a). Some fine sandpaper works well to remove any marks.

**FIGURE 1**

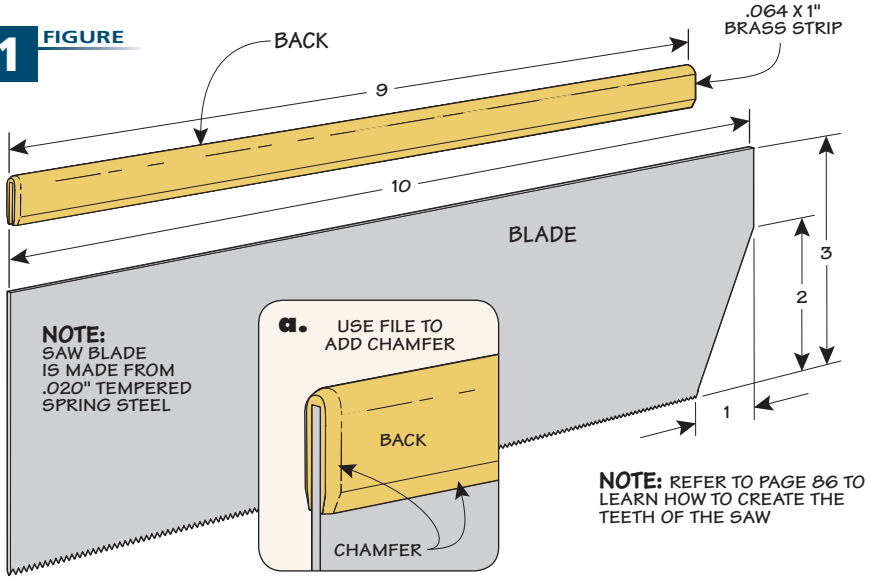

**Use a Hacksaw.** Clamping the blank between two pieces of plywood makes it easy to cut the blade to size.

**Clean Up.** After filing away the rough edges, sand the bluing from the entire blade using a sanding pad.

**Initial Bending.** Use a hammer and a piece of steel to gradually bend over the back in a vise, a small section at a time.

**Bend It Flat.** Clamp the folded back in the vise and bend it until it's almost flat. Jaw liners protect the brass from marks.

**Crimp the Back.** Finally, use the hammer and bar to crimp the brass back around the blade for a snug fit.

# pistol grip Handle

Now that the back saw blade is ready, it's time to make a handle for it. I made mine with an open grip. It's comfortable and I like the way it fits my hand. Plus, it's designed to keep my hand in line with the saw blade, giving me better control when lining up a cut.

**TWO BLANKS.** As you'll see, making the handle is pretty straight-forward. For starters, it's made from two oversized pieces of ½"-thick hardwood. You'll want to attach the pattern to the outside face of one blank with spray adhesive. (For a full-size pattern, go to *WoodsmithSpecials.com*).

Next, you can miter a corner of each blank, as in Figure 2. The miter makes it easier to hold the blank while you cut the wide, shallow rabbet for the saw blade.

You'll only need to shave a razor thin rabbet in one blank to make room for the blade. To do this, add an auxiliary rip fence to your table saw, exposing just a thin portion of the blade. Then cut a rabbet in a test piece, checking the fit with the blade before cutting it in your blank. A rabbeted push block helps to do this safely (Figure 3).

GO 2 Online Extras

To download a full-size pattern of the handle, go to:
WoodsmithSpecials.com

**2** FIGURE

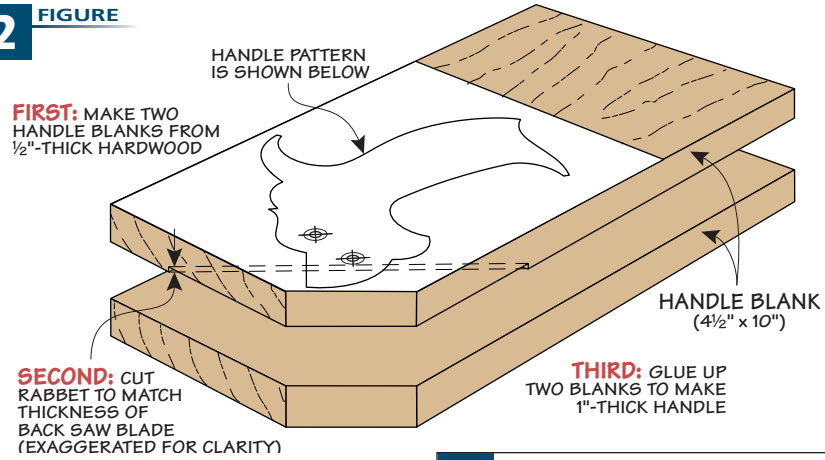


With the rabbet added, go ahead and glue up the two blanks. Just make sure not to get any glue inside the rabbet.

**HANDLE.** Now, you're ready to drill the holes for the blade. I started by clamping the handle and blade to the drill press table (lower right photo). To support the blade, I placed a piece of scrap beneath it. And I used masking tape to protect the teeth.

What's important is that the blade is properly aligned inside the rabbet before you start drilling any holes. To do that, draw a line from the top of the handle pattern down the mitered edge of the handle blank (lower right photo). Then, butt the blade up against the shoulder created by the rabbet. Just be sure to align the top edge of the blade with the line.

After the first hole is drilled, place a pin in the hole to keep everything aligned while drilling the second hole. Once both holes are drilled, set the blade aside.

**3**

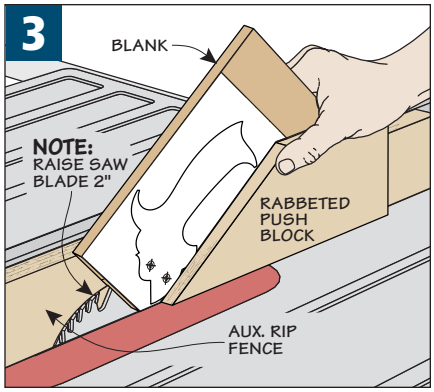


**INITIAL SHAPING.** As you can see in the photos and drawings at the top of the next page, there are several steps to shaping the handle. I began by cutting out the top part from the blank, but I left the bottom portion attached. This provides clearance for your hands while sanding and shaping the blank.

After cutting the initial shape at the band saw, use a sanding drum to

## Handle Pattern

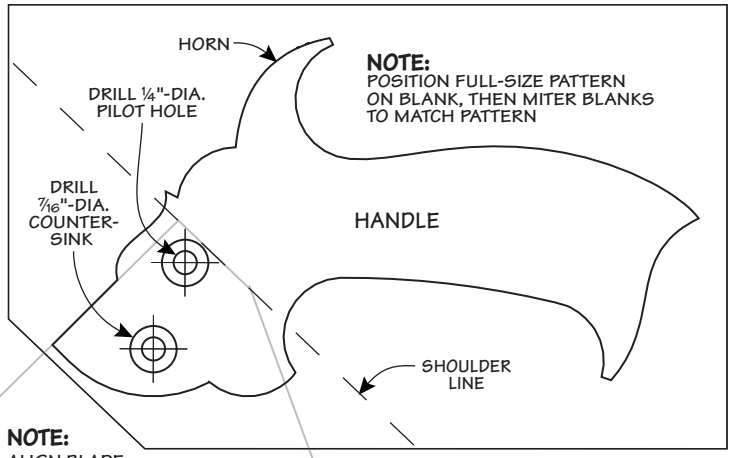


**Pattern for Handle.** To use this pattern to make your saw handle, you must first enlarge it by 200% on a copy machine.

**Drill Holes.** Clamp the workpiece and blade to the drill press table. Drill the first hole, then use a small pin to keep the blade positioned as you drill the second hole.

remove the saw marks. You can refine the shape and add the different edge profiles with chisels, files, and sandpaper.

**REFINE THE SHAPE.** A look at the drawing at right shows the steps used to refine the shape of the handle. First, use a ⅜" roundover bit to soften the edges on the grip (drawing and far right photo). Then simply file and sand the away the bullnose areas (drawing at right).

When shaping the "horn," the part of the handle that fits between your thumb and finger, you'll want to use a file to taper it gradually along its width and thickness. You can see how it fits my hand in the main photo on page 6.

Before cutting the handle from the blank, use a chisel to add the chamfer. Then finish shaping the handle by filing a bullnose along the bottom edge (drawing at right).

The last step is to create a slot in the handle for the back. To do this, first clamp the handle to your drill press fence (left photo below). A scrap block keeps the handle from tipping while drilling the holes. And a chisel works well to clean things up.

**ADDING HARDWARE.** I bought the knurled nuts and machine screws for my saw at a hardware store. The head of the nut was the right size, but I had to modify the threads to fit the screw. For more on this, check out the Online Extra at *WoodsmithSpecials.com*.

The steps for adding the counterbore and countersink for the screws and nuts are pretty simple. You'll find a tip for keeping things aligned while you drill them online.

I drilled the counterbore slightly small and tapped the nut down for a good, tight fit. If necessary, you may need to file the end of the screw so it's flush with the outside face of the nut. All that's left is a little finish sanding and a couple coats of oil finish and you're ready to put your back saw to use.

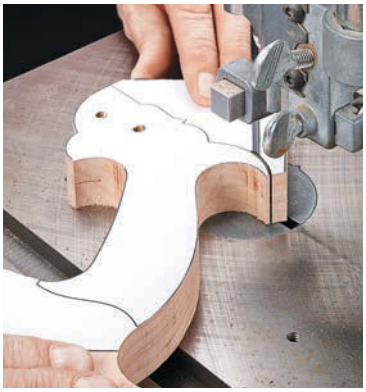

**Band Saw.** Cut the blank to rough shape using a band saw, but leave the bottom portion attached.

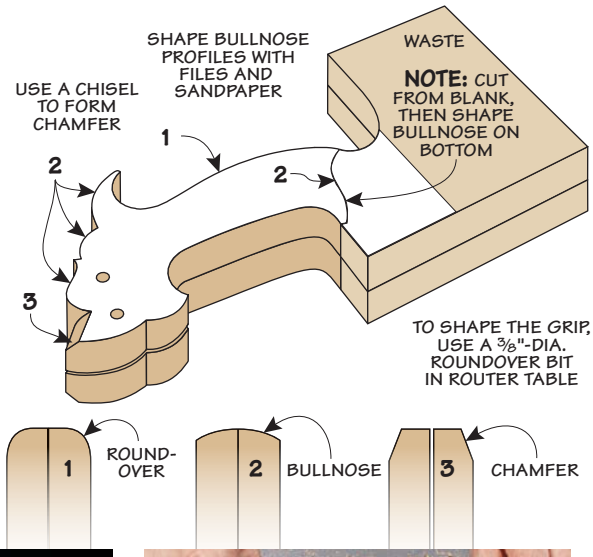

**Smooth Edges.** Before refining the shape of the handle, remove saw marks with a sanding drum.

**Shaping.** A ⅜"-dia. roundover bit in a router table does a good job of softening the sharp edges of the handle grip.

**Slot for Back.** To provide clearance for the back, rough out the waste at the top of the handle. Then, use a chisel to clean things up.

**Final Details.** The knurled nut fits into a counterbore on one side of the handle. And the screw head fits in a countersink.

**FIGURE 4**

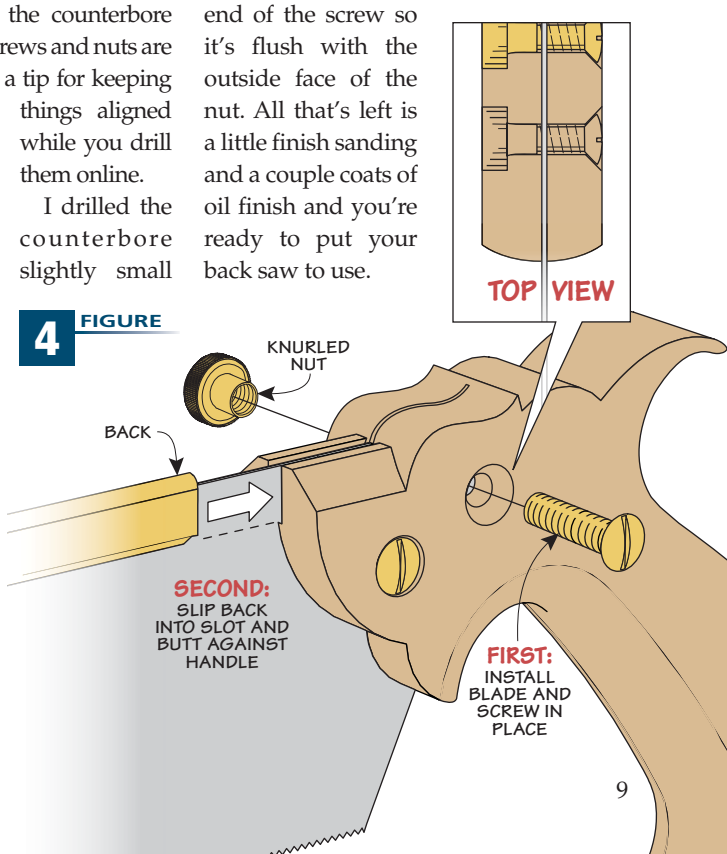

# custom, shop-made Scraper Shaves

A few pieces of scrap, some hardware, and a card scraper are all it takes to build a set of fine hand tools. You'll find them as useful as they are fun to make.

Removing marks and ridges left over from machining and hand tool shaping can be a challenge. For many of these types of tasks, I turn to a scraper shave. This unique hand tool makes cleaning up and smoothing oddly shaped workpieces a pleasure.

The gently curved handles are cut on a band saw and shaped to fit your hand. To sharpen and adjust the blade, all you do is loosen the two screws that hold the toe in place. Using the shaves produces a smooth, clean workpiece, even when working with figured wood.

**SCRAPER SHAVES.** The four versions shown above include a flat-bottomed shave, as well as two radius shaves designed especially for shaping round or curved pieces. You'll also find plans for a notched shave that's great for adding and smoothing chamfers.

# Construction Details

**OVERALL DIMENSIONS:**
11½"W x 1"H x 1⅛"D

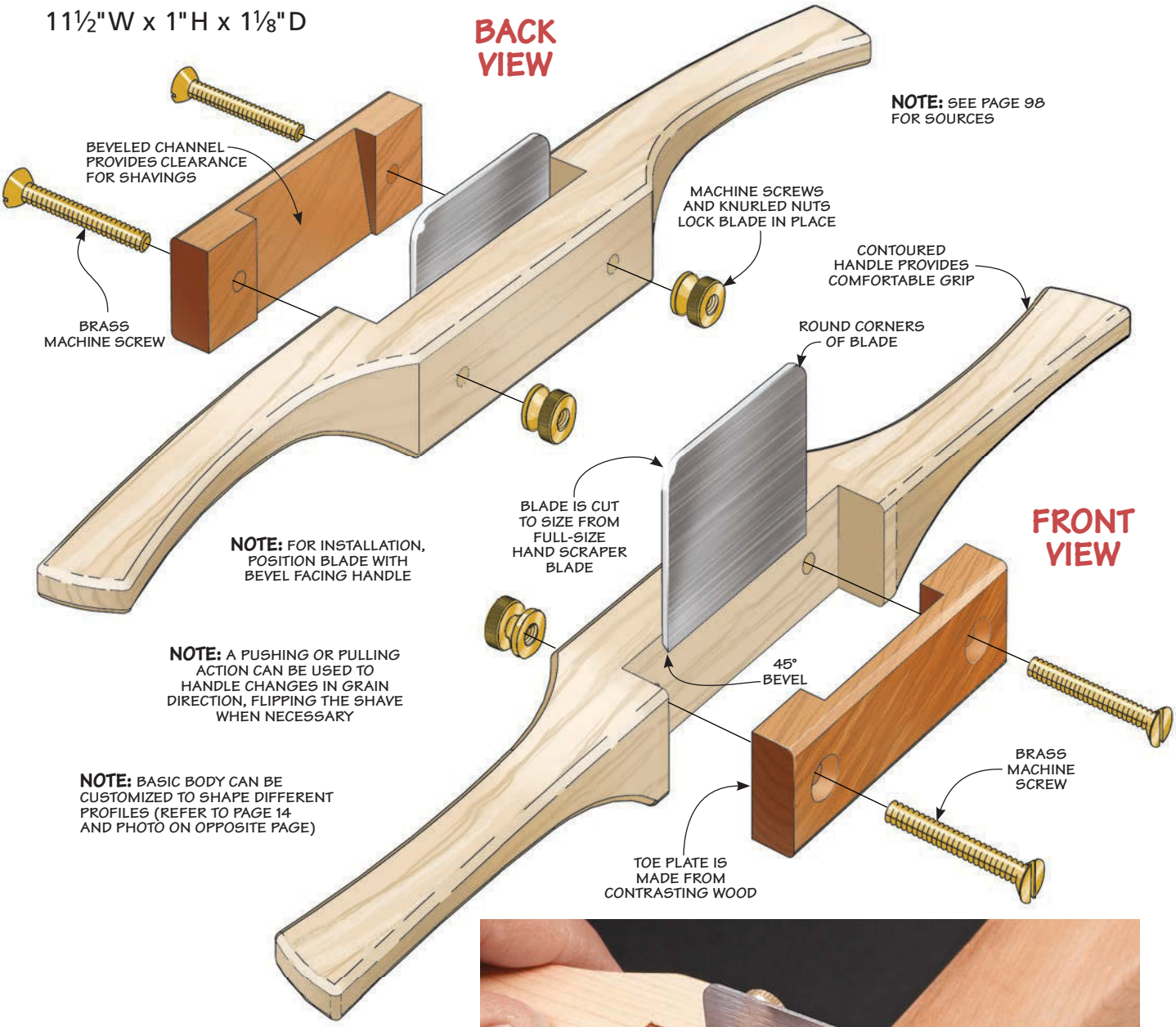


## MATERIALS & SUPPLIES

| | | |
|---|---|---|
| **A** | Handle (1) | 1 x 1⅛ - 11 ½ |
| **B** | Toe Plate (1) | ½ x 1 - 3⅛ |

- (1) 0.8 mm Cabinet Scraper
- (2) #10-32 x 1½" Fh Brass Machine Screws
- (2) #10-32 Brass Knurled Nuts

**Wispy Shavings.** The comfortable handles of this shave allow you to maintain firm control of the scraper. This makes it easy to smooth and shape the surface on a wide range of workpieces, whether straight or curved.

# making the Handle & Tote

Building a scraper shave is a fairly straightforward process. The handle of the shave is a single piece of hardwood notched in the center to create an opening for the blade and toe plate. The ends of the handle are shaped to form a comfortable grip on each side of the blade.

The toe plate holds the scraper blade securely in place. It's just a short piece of contrasting hardwood that fits inside the opening. Sandwiched between the handle and toe is the scraper blade. My blade is 2" wide, but the opening that it rests in is a little over 3".

This leaves room to spare on each side of the blade for a pair of brass screws and knurled nuts that lock the blade in place. To position the scraper blade for use, or simply sharpen it, all you need to do is loosen the knurled nuts.

Before you can shape the handle and cut the notch for the opening, you first need to cut the blank to size, as shown in Figure 1. Then, use a dado blade in the table saw to make the throat. To establish the throat shoulders and guarantee it's centered on the handle, I used the rip fence as a stop, rotating the workpiece between passes.

**1** FIGURE

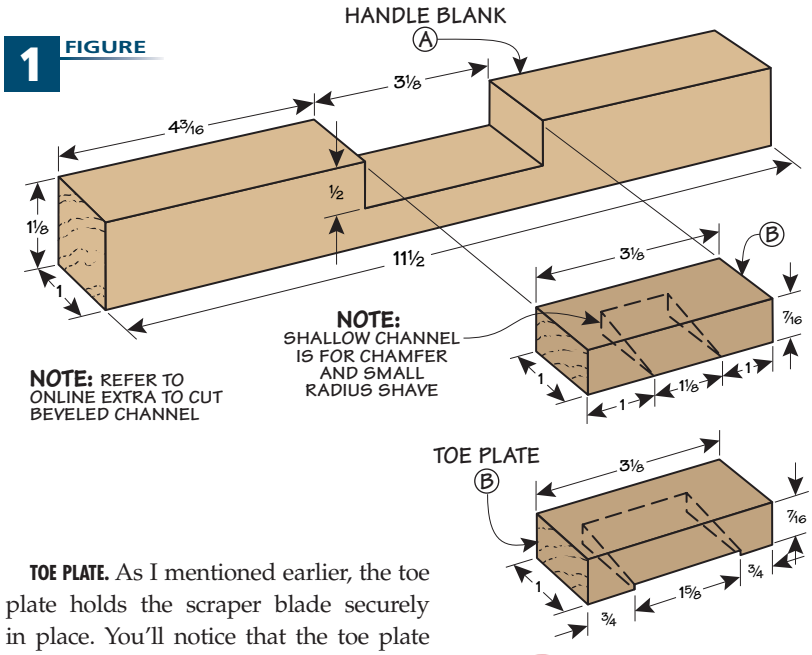


**TOE PLATE.** As I mentioned earlier, the toe plate holds the scraper blade securely in place. You'll notice that the toe plate is slightly thinner than the depth of the throat you made in the handle. There's a good reason for this. Later on, when the blade is installed, it ensures that the outside face of the toe plate ends up flush with the outside face of the handle.

**CHIP CLEARANCE.** On one face of the toe you'll notice a beveled channel. This channel provides clearance for chips and shavings (Figure 1). The Online Extra shows an easy way to get the job done on the table saw.

**ONE OTHER THING.** You'll notice that there are two different width channels. That's because only a narrow portion of the scraper blade is exposed on two of the shaves — the small radius curve and the chamfer versions.

GO 2 Online Extras

For an easy way to cut the beveled channel, go to: WoodsmithSpecials.com

**DRILL HOLES.** Now you're ready to shape the handle and toe, but before you do that you'll want to drill the holes and countersinks for the brass screws, as illustrated in Figures 2 and 2a. You could drill the pieces separately, but drilling the holes together ensures they'll line up. It's easiest to do this while the handle is still square. I used the drill press and a fence to keep things aligned, plus a piece of double-sided tape to help hold the toe in place.

**2**

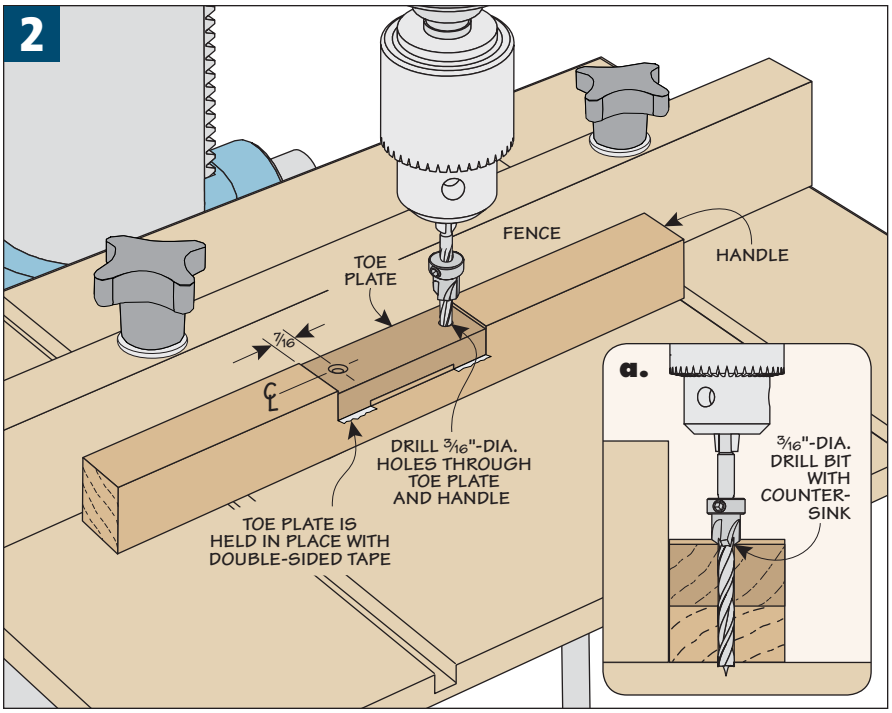


## SHAPING THE HANDLE

After completing the handle and toe plate that hold the blade in the shave, the next step is to shape the handle to make it a little more "user-friendly." Beyond the basic comfort of the sculpted ends, it's easy to see that their shape also helps you to control the scraper, allowing you to easily get into tight spaces.

**SHAPE THE SHAVE.** The two patterns at the bottom of the next page show the profile that I used for all four of the shaves. As you can see, the handle is contoured on all four sides for a comfortable grip. And a slight roundover on all the edges refines the fit and finish.

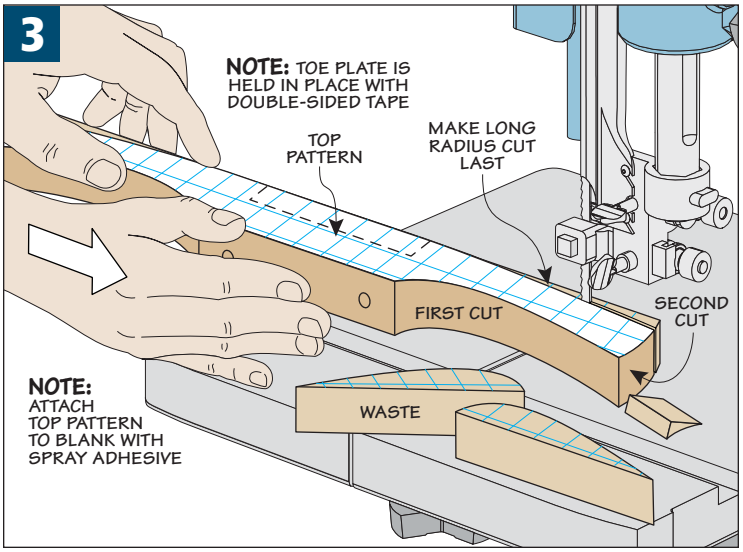


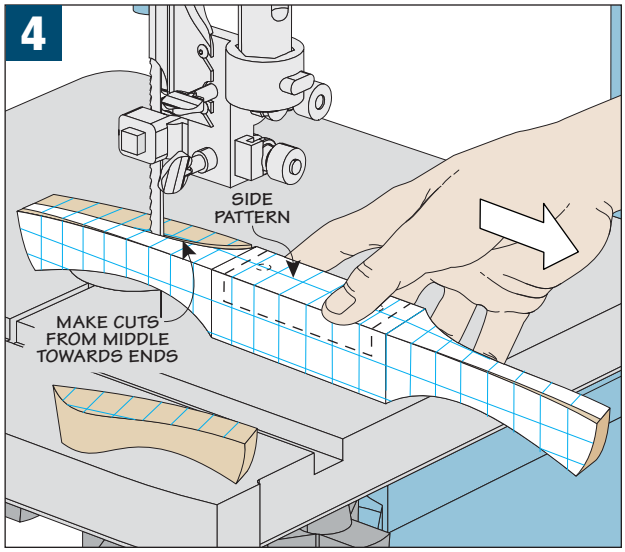


Go ahead and make full-size copies of the two patterns now. Then, set the side pattern aside and attach the top pattern to the handle with spray adhesive. Just be sure you get it attached in the correct orientation, as shown in Figure 3 and the pattern drawings below.

You'll also note that I used a couple of pieces of double-sided tape to hold the toe in place. Leave the toe plate in place during this step to help support the pattern while you're making the cuts.

**TOP PATTERN.** A band saw makes quick work of cutting the handle to shape. It's simply a matter of following the layout lines. And, to make things even easier, I've also included the order of the cuts in each of the patterns.

You'll make the first three pairs of cuts with the top pattern facing up and the bottom of the handle flat on the saw table — starting with the two deep curves of the back, followed by the two ends. Once those cuts are complete, you'll create the long, wide curve along the front of the shave (Figure 3).

**SIDE PATTERN.** With the cuts on the top face completed, you can finish up shaping the handle by cutting the side contours. Start by attaching the side pattern to the long, curved back face of the blank. In this case, the toe is facing up. You may notice, the band saw blade leaves ridges on your workpiece. If it helps make it easier to attach the pattern, go ahead and do a little sanding at this time.

If you look at Figure 4, you'll see that when the handle is set on the table, the curved ends touch the tabletop. This helps provide a little extra stability while making the last few cuts. I made the deep, curved cuts starting near the middle and working my way out to the ends, since some of the end may have already been cut away. Then, finish up by making the long radius cut (see the handle pattern below).

**FINISH SHAPING.** Now it's off to the workbench to refine the finished shape of the handle with files and sandpaper. And, to make the handle a comfortable fit, I sanded off all the sharp edges.

If you've decided to make just the flat-bottomed shave, the next step is to prepare the scraper blade. But you can also build a custom set of shaves, including the small and large radius and a chamfer shave, plus the blades to fit them. For information on building these shaves, turn to the next page.

# Handle Pattern

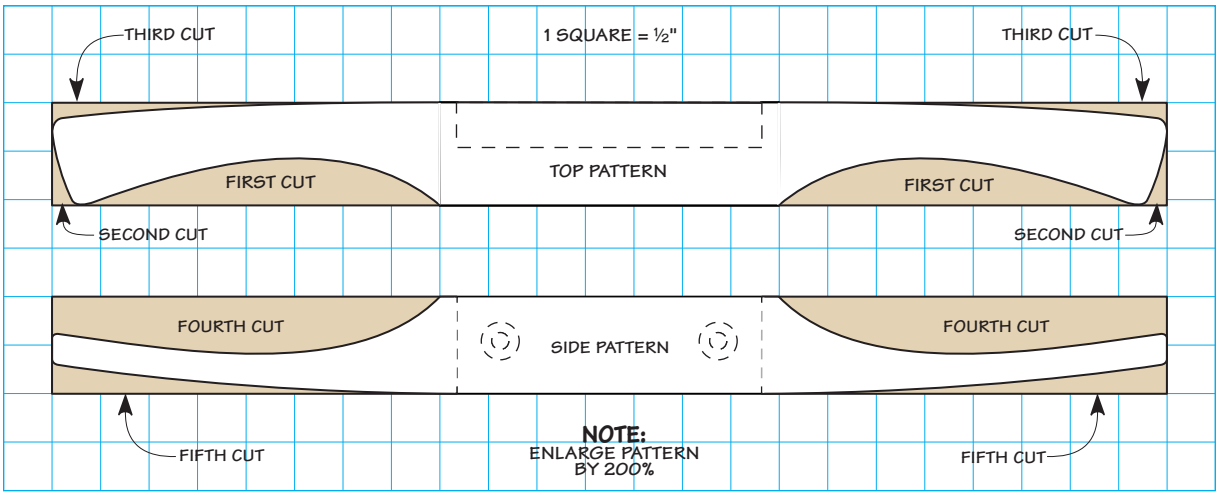

# customizing the **Shave Profiles**

A basic scraper shave works well for smoothing flat surfaces and convex curves, but it's easy to customize one to make it even more versatile. The basic handles start out the same for the three custom shaves shown at right. Making all three completes a set of shaves that can tackle all kinds of tasks.

**RADIUS SHAVES.** As you can see in the top drawing, the narrow radius of the small-radius shave works great for doing final smoothing of round shapes. I use the large-radius shave in the center drawing to make light passes when I'm cleaning up irregular-shaped pieces like cabriole legs.

Forming the radius for each shave is simple. First, I used the band saw to rough things out. Then, I refined the profile using a sanding drum at the drill press. All it takes is a little filing and finish sanding to complete the profiles.

**CHAMFER SHAVE.** This shave is a great little tool for quickly easing the edge of a workpiece. Again, use the band saw to form a 90° notch on the base (lower drawing). Then, finish up with a file and some sandpaper. Once that's complete, you can make the scraper blades to fit the shaves and prepare them for scraping.

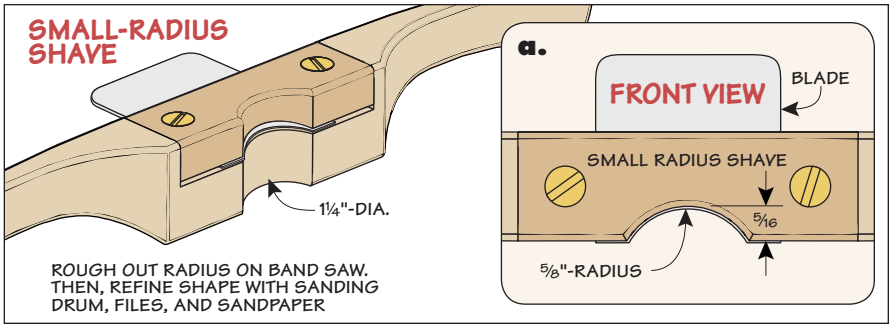


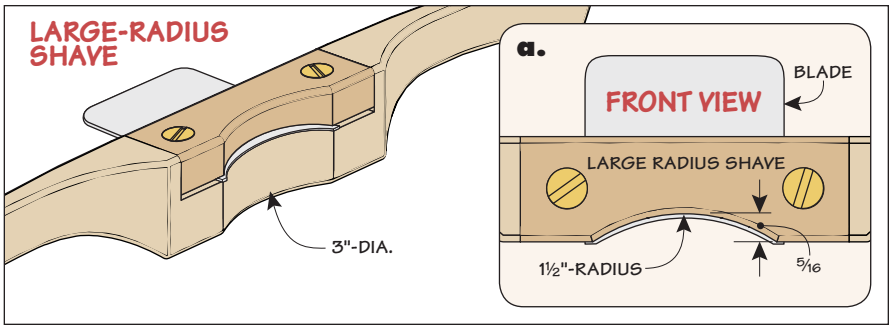


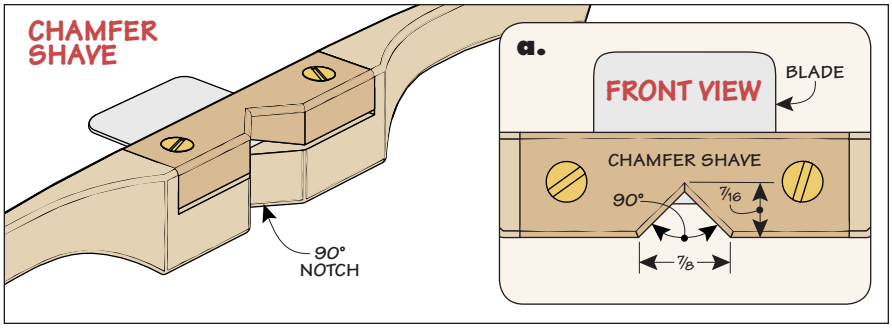


## THE BLADE

The key to making a shave work is the blade. Forming a 45° bevel and creating a burr is the secret, and it's easy to do with a few basic hand tools. But first, you'll have to "cut" an inexpensive scraper blade down to size to fit the shave body.

**SHAVE BLADE.** All you need is a piece that's 1½" x 2". After it's cut down to size, I'll explain how to make the bevel and add the burr on the flat-bottomed and chamfer versions. To learn more on how to prepare a scraper blade for the two radius-profile shapes, see the box on the next page.

The simplest way to cut a full-size scraper blade down into four smaller versions is to first clamp the blade to your benchtop. Then, I used a small triangular-shaped file to score a line across the width of the blade, as shown in the photo 1, below. When that's complete, clamp it in a vise and snap off the blade, like you see in photo 2. Now, just repeat the process for the other side to create all four scrapers.

**Score & Snap.** Clamp the full-size scraper blade to the workbench and score a groove with a file. Then, place the blade in a vise and gently pull on the blade until it snaps at the groove.

**Shape & Burnish.** A smooth mill file works great to form the 45° bevel on the edge of your shave blade. Once that's complete, use a piece of hardened steel to add a slight hook.

**SHARPENING THE SCRAPER.** Once you've cut the blade to size, it's easy to get it ready for use. You'll first need to file one edge of the blade to form a bevel at 45°. This means you'll only be able to form a single burr on the edge of your scraper. But, the nice thing is — creating the burr is simple. One or two strokes with a hardened-steel burnisher is usually plenty.

**FILE.** Start by filing the end of the scraper with a smooth mill file to about a 45° angle (photo 3 on the previous page). (The exact angle isn't critical.) I used a smooth, even motion, pushing the file away from me and then lifting it up on the return stroke. Five or six passes with the file is just about right.

**ADD A BURR.** Next you'll need to create a burr on the bevel. As you can see in the far right photo on the previous page, I did this by clamping the scraper in a vise and drawing the burnisher over the bevel. The idea is to "turn" a slight hook away from the bevel.

### USING THE SHAVE

The beauty of a scraper shave is that it's extremely easy to use. And because you can use it with either a pushing or pulling action, you're always able to quickly handle changes in grain direction. Of course, this means flipping the tool often, especially on a piece of hardwood with a lot of figure.

**Flat-Bottomed Shave.** Use this shave on small flat surfaces, or any time a large cabinet scraper can't be used.

A scraper shave makes it easy to shape and smooth a workpiece that would otherwise be difficult to work. I've used my flat-bottomed shave to do most of the prep work for finishing that I often had to tackle with sandpaper (photo above). And the radius shaves are great for removing ridges left behind after using a spokeshave to make chair parts (top right photo).

Finally, when I need to soften an edge, the flat blade that protrudes just below the V-notch in the chamfer shave makes it easy. You can see what I mean in the photo at right.

To produce a smooth, even surface with very little effort, a scraper shave is the tool to reach for. In fact, it might surprise you how often you end up using one.

**Shape On the Round.** Ridges are easy to remove on chair parts or round objects using either of the radius shaves.

**Ease an Edge.** The V-notch on the chamfer shave makes it easy to soften an edge on a 90° corner.

## Creating a Curved Blade

Before you can use the radius shaves, a profile needs to be formed in the small scraper blade to match the shape of the shave sole. Once they're shaped, you'll need to add the bevel. After a little experimenting, I found the best way to form the radius and the bevel is to use a sanding drum in my drill press.

**Sand the Profile.** Start by holding the blade with a pair of pliers, while using a 60-grit sleeve on a 1"-dia. drum to do some aggressive sanding to shape the profile. The blade heats up quickly, so be sure to dip it in water often.

To create a cutting edge, you'll need to form a 45° bevel, but no burr is necessary. The best way to do this is with a sanding drum and a shop-made holder made from a block of wood, like the one shown in the photo and drawing at right.

Switch to a 1½"-dia. drum and 100-grit sandpaper for this step. You may have to do a little freehand sanding to make the bevel on the large-radius blade. Finally, hone the beveled edge and lap the back of the blade on a stone.

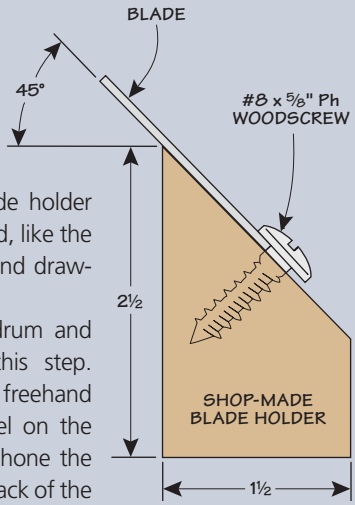

# infill Smoothing Plane

Show off your craftsmanship and attention to detail with this great-looking heirloom tool. The steel and wood body will last for generations.

For years, a hand plane has been the symbol of fine craftsmanship. So when we were thinking of the right projects to showcase in this book, a metal-bodied hand plane jumped to the top of the list. As you can see, this isn't an ordinary plane. The design is called an infill plane since the wood parts completely fill the steel body. It combines a compact size with a thick, heavy blade and a lot of mass to create the ultimate surface on wood.

Contrary to what you might think, a high-performance tool like this doesn't have to be complicated to build. You'll find that the construction is mostly straightforward drilling and filing. Along the way, you'll pick up a few skills in working with metal and wood. The result is a tool you can be proud of and use every day.

# Construction Details

**OVERALL DIMENSIONS:**
2 5/16" W x 4 3/4" H x 9" L

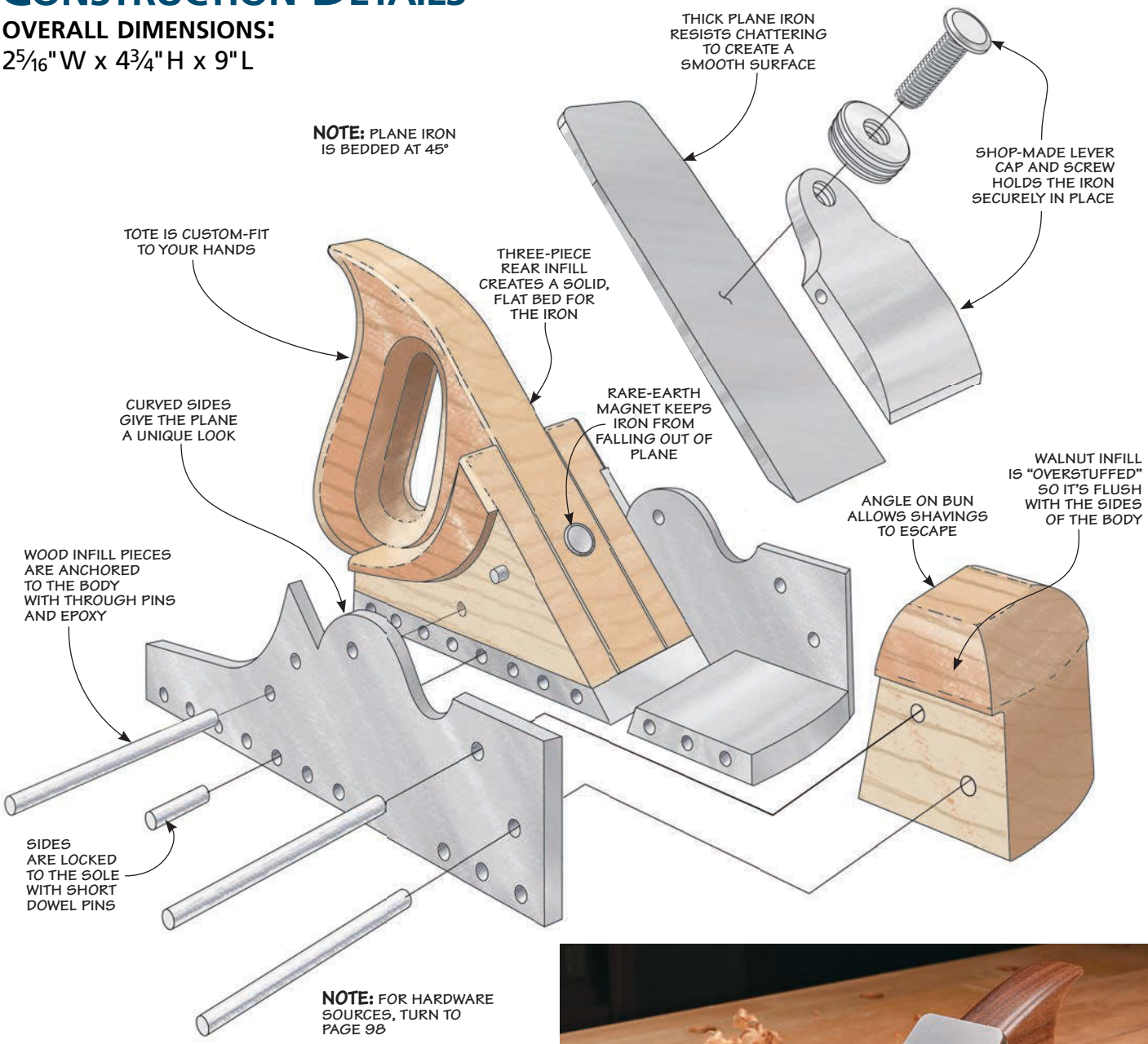


## MATERIALS & SUPPLIES

| | | |
|---|---|---|
| **A** | Sides (2) | 2 x 7 - 5/32 Steel |
| **B** | Sole (1) | 2 x 8 1/2 rgh. - 5/16 Steel |
| **C** | Lever Cap (1) | 1 31/32 x 3 - 5/16 Steel |
| **D** | Bun (1) | 2 5/16 x 2 1/2 - 1 7/8 rgh. |
| **E** | Tote (1) | 1 x 4 3/8 - 7 rgh. |
| **F** | Cheeks (2) | 13/16 x 2 1/4 - 4 9/16 |

- (1) 1 7/8" x 3/16"-thick Plane Iron
- (1) 3/8-16 x 1 1/4" Rh Machine Screw
- (1) 1/2"-dia. Rare-Earth Magnet and Cup
- (1) 5/32" x 36" Steel Rod

**Style.** The thick steel body gives this plane the heft to make perfect shavings. And the walnut infill adds a classic look.

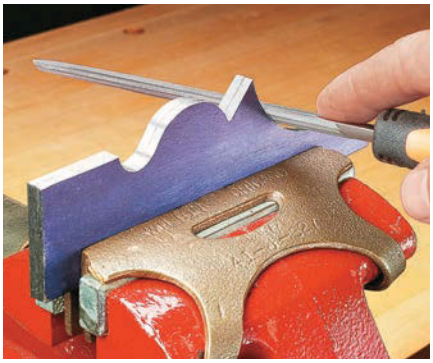

**Fine-Tune the Shape.** Hold the side pieces together with double-sided tape and use files to clean up the cut edges.

**Trace the Template.** Coat each side blank with layout fluid and trace the profile of the side with a scribe.

# start with the **Steel Body**

The work on the hand plane begins by creating a solid steel body to hold the wood infill and blade. The body is made up of three pieces. There are two sides and a sole. (Later on, the sole will be cut into two parts.) These pieces are held together with steel dowel pins.

You can't connect the sides and sole right off the bat. It makes sense to shape the side pieces first and drill the holes that are needed to join them to the sole, the wood infill, and the lever cap. So I started by cutting blanks for the sides from a length of 5/32"-thick steel bar stock.

The steel I chose for the plane is precision-ground stock. That means it's consistent in width and thickness, unlike the rolled stock you'll find at the hardware store. As you might imagine, it costs more. But the payoff is the time and frustration saved by working with flat, uniform parts.

I cut a 7"-long blank from each end of the 24"-long bar I ordered. This gave me a square corner on each piece to use for the front end of the plane body.

**LAYOUT.** Laying out the sides on the blanks comes next. I used the pattern below to make a 1/8" hardboard template. The template made it easy to trace the pattern on the steel blanks (top photo).

**Perforate the Profile.** Drill a series of holes along the edge of the profile layout to ease the cutting.

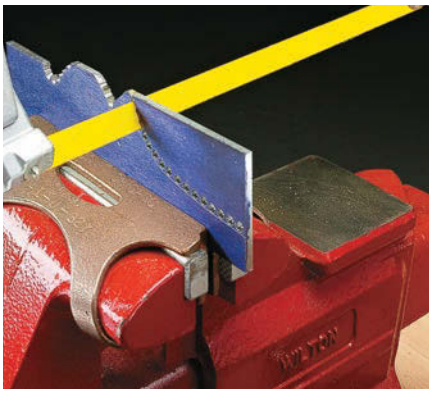

**Connect the Dots.** The holes reduce friction and help guide the hack saw to cleanly cut the curves.

**SHORTCUT.** All the metal that needs to be removed may seem a little daunting. But there's a way to simplify the process. At the drill press, I drilled a series of holes just outside the edge of the profile (left photo above). Then, you can "connect the dots" with a hack saw (right photo above).

Drilling and cutting still leaves a pretty ragged edge. So smoothing the rough edges into a crisp profile is the next order of business. A little work at the bench grinder removes most of the waste.

## SIDE PATTERN (SHOWN ACTUAL SIZE)

1 SQUARE = 1/4"

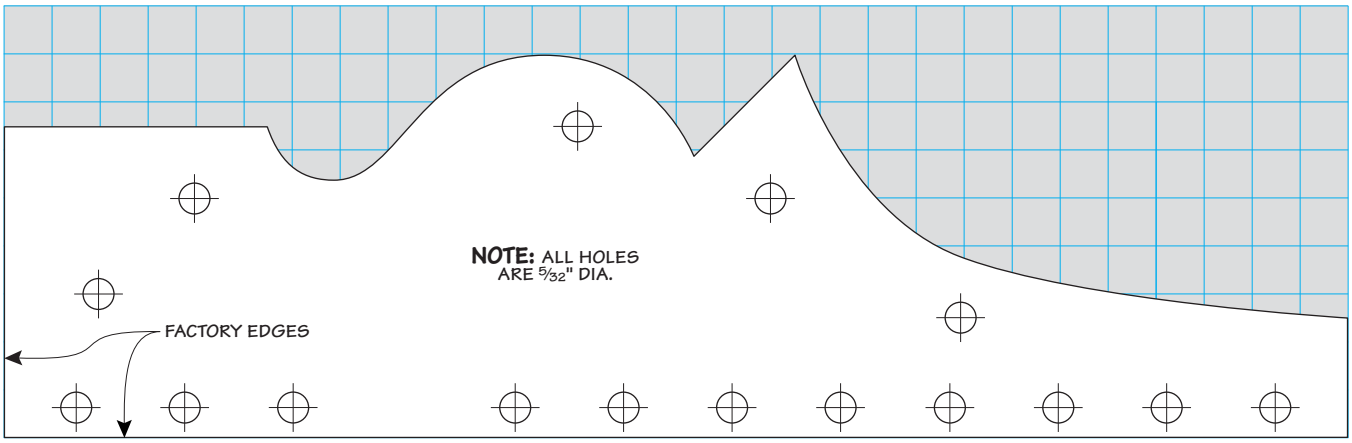

**Drilling the Holes.** Leave the steel sides taped together while you mark and drill the holes at the drill press.

**Deburr the Holes.** While you're still at the drill press, touch up the holes on the inner and outer faces with a countersink bit.

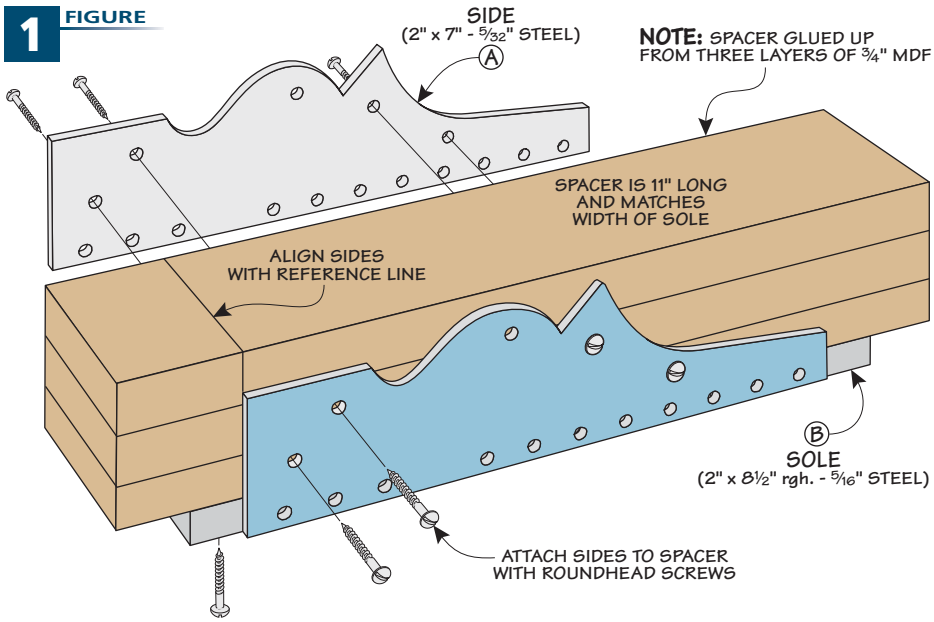


For fine-tuning the sides, I taped the two pieces together and used files and sandpaper to work down to the lines and guarantee the sides were identical.

**DRILLING HOLES.** Leave the sides taped together while you use a second pattern and a centerpunch to mark a series of holes. A row of holes along the bottom accepts short pins to join the sides to the sole, as in the upper left photo. A pair of holes at the front and back anchor the wood infill to the sides with long pins. Finally, I drilled a hole near the top of the hump. This will be the pivot point for the lever cap.

After drilling the holes, I touched up the edges on the inner and outer faces with a countersink bit (lower left photo). This deburrs the holes and makes fitting the wood parts easier.

**THE SOLE.** The other part of the body to make is the sole. I started with an extra-long blank. The first step is to drill holes in the edge of the sole that line up with the holes in the sides. The trick is keeping all the parts in place. To do this, you can attach all three pieces to an MDF spacer, as shown in Figure 1. Drill holes at each end of the sole and screw the sole to the spacer. (The holes get cut away later.) Then loosely clamp the sides in place. Use a reference line on the spacer to keep the side pieces aligned.

Once I was satisfied with the position of the parts, I screwed the sides to the spacer with roundhead screws. While the screws do a good job of holding the parts together, they don't allow the body to lie flat. I supported the body on a piece of plywood. A couple of shallow holes accept the screw heads, as in Figure 2a. Then it's just a matter of drilling the holes along each edge of the sole using the holes in the sides as guides, as in Figure 2.

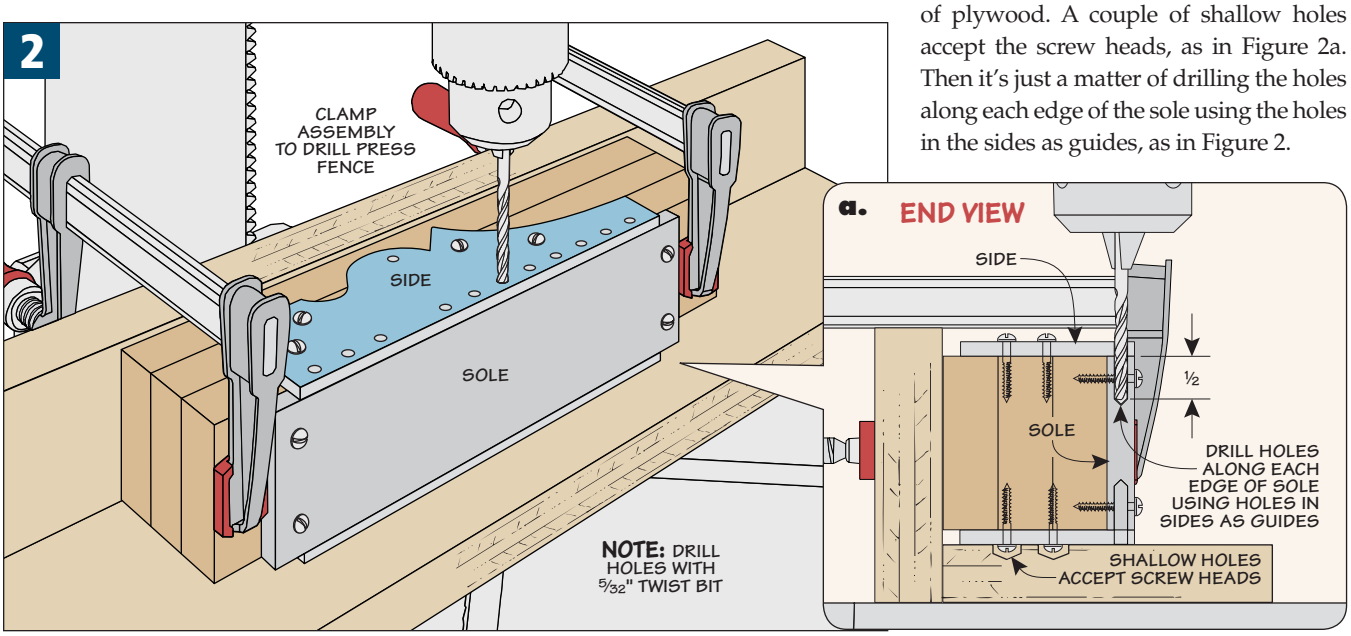

# making the Sole & Lever Cap

There's still a little metal work left to wrap up before the plane body can be assembled. Up first is cutting the sole blank into a front and back section. Then comes some final sizing. The metalworking portion ends with making the lever cap and screw. These two items provide the clamping force that keeps the plane blade in place.

**THE MOUTH.** There are a couple of considerations when cutting the sole into its two parts. The first is it needs to be in the correct front-to-back location. Secondly, the rear sole needs to be beveled to match the bed angle.

To tackle the first consideration, mark the slope of the bed (45°) on the sides with layout fluid and a scribe. This line should correspond with the flare on the sides, as shown in the side view of Figure 3. Then with a square, carry this line across the sole of the plane.

Determining the size of the mouth opening is next. I placed the iron on the layout line on the side. I marked its thickness on the side and then across the bottom. This is the size of the mouth opening. (You'll fine-tune the size of the opening later.)

**3 FIGURE**

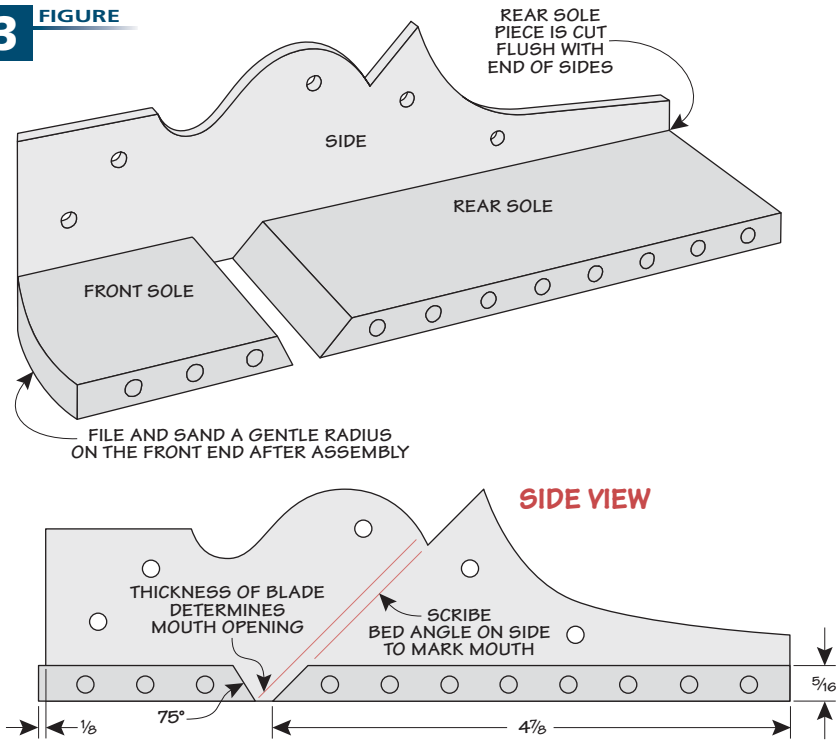


From here, you can disassemble the body from the spacer block and cut the mouth with a hack saw. Stay to the waste side of the lines and clean up the cut edges with a file.

**BEVEL ANGLES.** Both the front and back piece of the sole are beveled. The back is angled to match the blade cutting angle. The front is beveled at 75° to allow shavings to clear easily.

You could file these bevels, but that's a lot of material to remove. A better option is to use a hack saw to cut away as much of the waste as you can. To get right up to the line, I cut a block at the bed angle and used it as a guide for filing and sanding up to the line.

**FINAL LENGTH.** There are two remaining cuts to make on the plane body. These are to cut the front and rear sole pieces to final length. To do this, assemble the sides to the sole using some steel pins to index each piece correctly. Then mark the final length of the front and back piece of the sole using the sides as a guide.

Now you can cut the pieces to shape. The rear piece is cut flush with the back end of the sides. The front piece is cut square and left a little long (1/8") for now.

**RIVETING TIME.** At this point, the plane body is ready for some permanent assembly. For this, 5/32" steel pins are peened in the holes. The hammering swells the pins and locks the sides and sole pieces tightly together.

I began the process by cutting 22 pins to length (about 11/16"). Use some of the pins to register the sides to the sole pieces. I also screwed the spacer back in place to keep the sides square to the sole. Then it's just a matter of peening the pins into the sides.

**4**

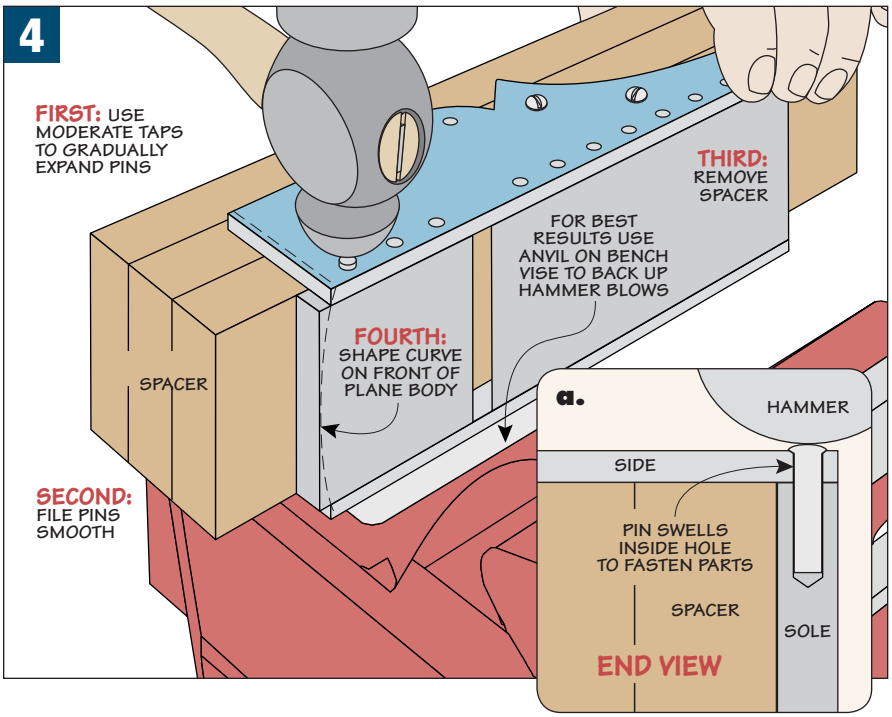

**SLOW & STEADY.** Support the plane body on the anvil of your bench vise, as shown in Figure 4. The key here isn't whacking the pins mercilessly. Moderate taps will mushroom the heads and flare the sides of the pins to lock the side of the plane to the sole, as you can see in Figure 4a.

Work your way down one side, then the other. When you're finished, you can file away as much of the protruding pin as possible. A little sanding will even everything out. (Don't worry about a final surface yet.) Take a minute now to file and sand a gentle radius on the front end of the plane, as in Figure 3.

**LEVER CAP.** You can set the plane body aside for now and make the lever cap assembly. It fixes the blade firmly against the bed. It consists of a lever cap and a screw. The lever cap is cut to shape from the leftover steel used to make the sole. I laid out the shape and hole location with dye and a scribe, just like before.

While I still had a long piece, I drilled and tapped the hole for the screw. With a grinder and files, I shaped a gentle curve along the front edge. I also sanded the edges so the lever cap slips easily into the plane body without binding.

Then you can drill a through hole for the pin that holds the cap in place. I used a fence and stop block to drill this hole from both sides. The lever cap should pivot freely. So I reamed out the hole with a slightly larger bit (11/64"). This extra wiggle room makes it easier for the lever cap to seat tightly against the blade when installed in the plane.

You can use the same drill and cut technique to shape the lever cap as the sides. The box below details how to make the screw.

**FIGURE 5**

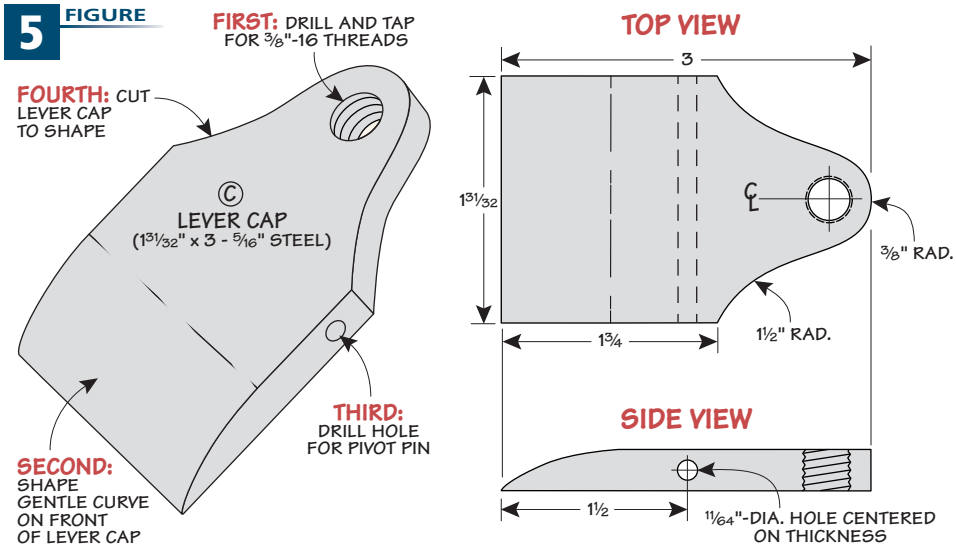


# Custom-Made: Cap Screw

The screw for the lever cap is made from a machine screw with a large head. The photos at right cover the main points to make it, and I'll mention a few details.

The head is made from a piece of the sole and lever cap stock. Use a 1" hole saw to score the overall shape of the head, but stop before cutting completely through. (The pilot bt should drill completely through the center hole.) Leave the blank in place and drill and tap the center hole to match the machine screw. Reinstall the hole saw and complete cutting out the head.

To give the head a better grip, I chucked it into the drill press with a bolt and jam nuts. Then I cut two grooves in the edge with a hack saw. A support block helps to hold the hack saw steady. Finally, thread the head onto the screw with thread lock then grind and file away the machine screw's slot.

**Score the Head.** A hole saw works well to shape the head and drill an initial pilot hole.

**Tap the Threads.** Drill a 5/16"-dia. hole and tap it to match the 3/8"-16 threads on the machine screw.

**Grooves.** A hack saw supported by a hardwood block cuts shallow grooves in the head.

**No Slot.** After threading the head onto the screw, grind away the machine screw slot.

# creating the **Tote & Bun**

After all the grinding, filing and peening, I was happy to move back into the more familiar territory of woodworking and got busy on the infill pieces. At the back, a D-shaped tote and a pair of cheeks provide a solid bed for the iron. Up front, a rounded bun provides a comfortable grip.

**FRONT BUN.** I began with the easiest part — the bun. Because the shape of the bun is small and irregular, it's a good idea to start with an extra-long blank. This allows you to make the angled cut on the back safely.

The width of the blank should match the outside width of the plane body. The first item is to cut a shallow rabbet on each side of the bun so that it can slip into the body. I deliberately set the dado blade a little low and shallow. This allows me to sneak up on the depth and width of the rabbet for a nice, snug fit (Figure 6).

From there, I marked and cut the bevel on the back edge of the bun. Lay the bun on its side and angle the miter gauge to match the angle of the sole. To balance the bun while making the cut, I placed a shim under the rabbet.

**SHAPING.** That takes care of the back end of the bun. For the front, slide the bun into place and line up the bevel with the mouth. Trace the curved sole on the bottom side of the bun. Then make a quick trip to the band saw to cut the rough shape. You can complete the bun by rounding the upper edges for a comfortable grip (Figure 6).

**REAR INFILL.** I mentioned before that the rear infill is made up of several layers. Let's start with middle layer — the tote.

**Comfortable Grip.** Rasps and files make quick work of creating a comfortable, custom-fit tote.

For now, you can concentrate on cutting and shaping the back end of the tote. Use the pattern shown below to cut the profile and hand hole. (The angled front edge will be cut later on.) Using rasps, files, and sandpaper, smooth and roundover the edges to create a comfortable grip. Spend some time on this step to ensure a good fit for your hand.

**GO 2 Online Extras**

To print full-size patterns for the tote and cheeks, go to: WoodsmithSpecials.com

**6 FIGURE**

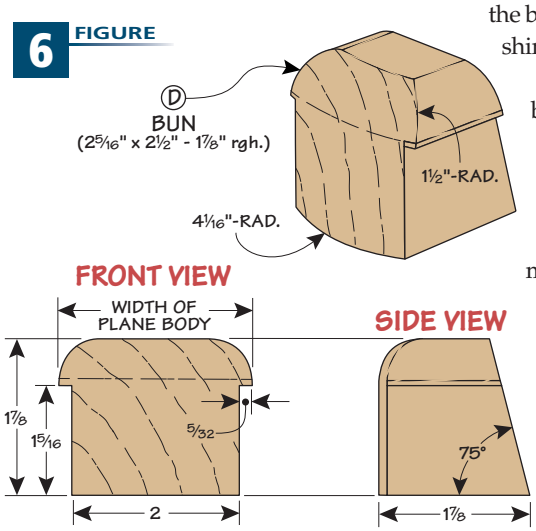


**PATTERN** (ENLARGE TO 200%)

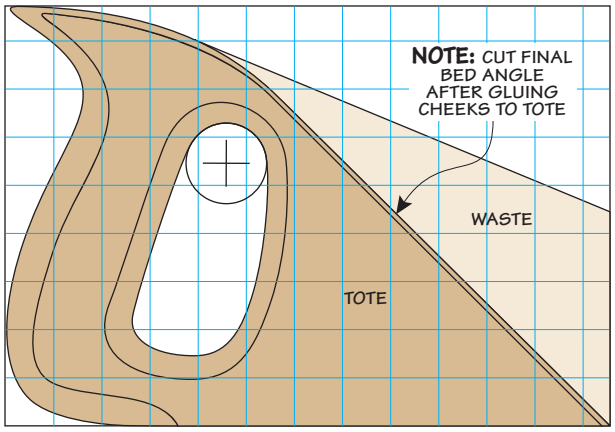


**PATTERN** (ENLARGE TO 200%)

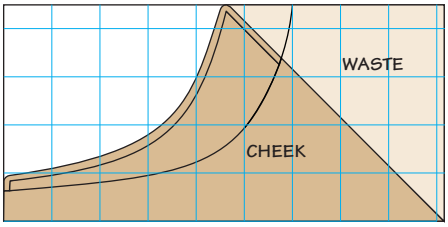


**7 FIGURE**

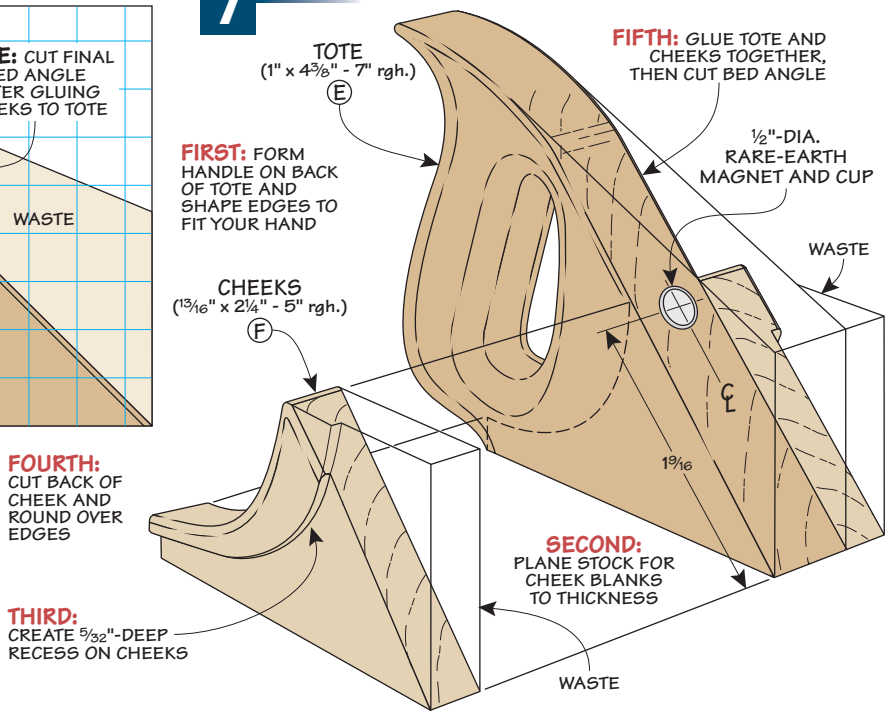

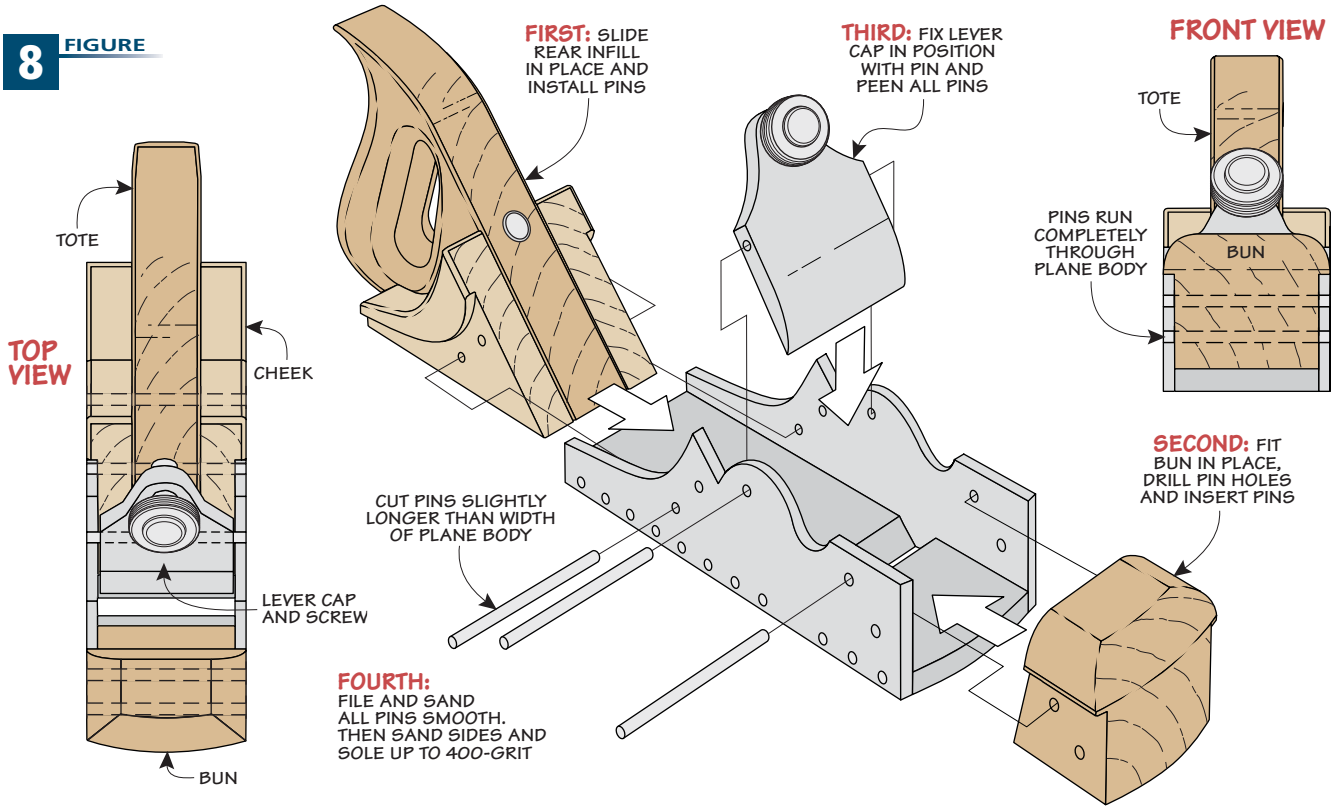


**CHEEKS.** With the tote shaped, you can turn your attention to the outer layers of the rear infill. You can start by planing two blanks. The combined size of the cheeks and tote needs to match the overall width of the plane body.

The cheeks have a shallow recess to allow them to wrap around the sides of the plane, as in Figure 7. Align each blank with the end of the plane side and scribe the profile onto the blank.

A Forstner bit in the drill press makes quick work of defining the bottom of the recess. The depth of cut should match the thickness of the side ($^5/_{32}$"). Back at the bench, use chisels and files to flatten the recess and trim the shoulder to match the curved side.

You have two goals here. The outer face of each cheek should be flush with the side of the body. And the tote and cheeks should slip into the plane body snugly.

When you're happy with the fit, cut the rear curve of the handle at the band saw. Now, all that's left is to clean up the saw marks and round over the edge (Figure 7). At this point, you can glue up the rear infill pieces.

**BED ANGLE.** The task now is to create the bed for the iron on the front of the rear infill. It needs to match the angle of the sole and line up with the flare on the sides of the plane body.

It's better to gradually work up to the right fit than to try and do it in one fell swoop. To do this, slip the rear infill into the body and drill holes through the sides. A pair of pins register the infill, so you can mark the cut line on the sides and bottom edge. Tilt the miter gauge and make a cut short of the line. Check the fit in the plane body and repeat the process. When you're close, you can do some final fitting with files and sandpaper.

There's just one thing left to do on the rear infill. And that's to drill a hole to accept a rare-earth magnet and cup. This keeps the iron from slipping out of the body when the lever cap is loosened.

**FINAL ASSEMBLY.** At this point, The plane is ready for assembly. The steps are detailed in Figure 8.

The final detail is to fine-tune the mouth. To eliminate tearout while planing, the mouth should be tight. Install the blade to check the fit. If necessary, file the front part of the sole to open the mouth slightly. Once you apply a finish, the result is a plane that works as great as it looks.

## Choosing a Good: Finish

You really can't go wrong in choosing a finish for this plane. I applied a coat of boiled linseed oil to really bring out the chocolate brown of the walnut infill (photo at right). But oil doesn't offer much protection. To improve the durability and add some sheen, I wiped on a few coats of wiping varnish. When it was dry, I buffed it smooth.

# traditional Scratch Stock

Create custom profiles with this heirloom tool that you can build in a weekend.

While a router is the first tool many woodworkers think of for creating a profile on a workpiece, there's another tool that's perfect (and in some ways better) for the job — a scratch stock. This traditional tool uses a thin steel cutter to shape a profile using a scraping motion. This high-angle cut produces a smooth surface. In addition, a scratch stock can make details that are more intricate than those on router bits. Finally, you can make your own cutters (refer to page 27) to match unique profiles or existing moldings.

Building the scratch stock shown here is a good way to use a special piece of highly figured wood. (I used curly maple.) And it only takes a few hours to make.

**Smooth Profiles.** A custom-made, thin steel cutter is all it takes to create crisp profiles on your workpiece.

**TWO-PIECE DESIGN.** Traditional scratch stocks were cut from a single, L-shaped block of wood. A kerf along the center of the long leg held the cutter. The short leg registered the scratch stock against the edge of the workpiece.

This scratch stock is a little different. It's made with two parts: a beam and a fence, as shown in Figure 1. The separate fence allows you to adjust the distance between the cutter and the fence. In addition, a wider fence makes it easier to keep the profile consistent on straight workpieces.

**THE BEAM.** I started construction by making the beam. Its main purpose is to hold the metal cutter securely. As you can see in Figure 2, it's pretty straightforward. After cutting the beam to overall size, I added a few details. First, I drilled a hole near one end. This is used to attach the fence with a machine screw and wing nut.

**A LONG KERF.** The metal cutter fits into a kerf cut along the center of the beam. A set of screws pinches the beam around the cutter and prevents the cutter from chattering. The kerf should be close to the thickness of the cutter to get the tightest grip. I found the best way to make the long kerf was with a handsaw.

The key in making a long, straight cut like this with a handsaw is getting a good start. For the layout, I used a marking gauge to scribe the cut line on the top and bottom edges and one end of the beam. The knife point of the marking gauge creates the starter line for the saw. I used a double-sided Japanese-style pull saw (ryoba) to make the cut. It doesn't have a back that would limit the depth of the cut.

Clamp the beam in your vise so that it angles toward you and you can see the line on both the end and edge of the workpiece. Seeing both lines helps you keep the saw vertical and establish the cut line.

Start the cut at the top corner with a few short strokes. Take care to make this straight. Once you have the line started, you can lengthen the strokes and increase the pace. Your starter line will keep the saw on track. After cutting for a few inches, you can reposition the beam so it's vertical in the vise. Then just work your way down to the end marks for the kerf.

**SCREW HOLES.** Once the kerf is complete, the next step is to drill a few countersunk holes along one face of the beam for the screws that will pinch the blade.

The final steps on the beam involve cutting a few curves. I softened each end of the beam with a gentle radius. Then I routed a roundover along a portion of the lower edge of the beam, as shown in Figure 2a. This allows you to tilt the scratch stock to find the best cutting angle for creating the profile.

**1 FIGURE**

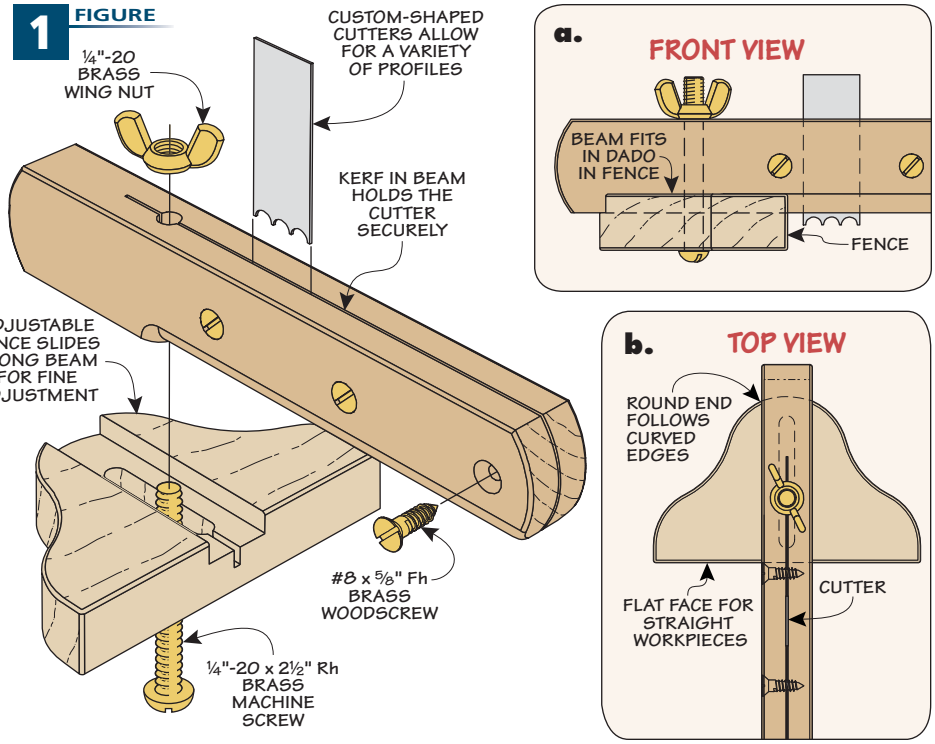


**2 FIGURE**

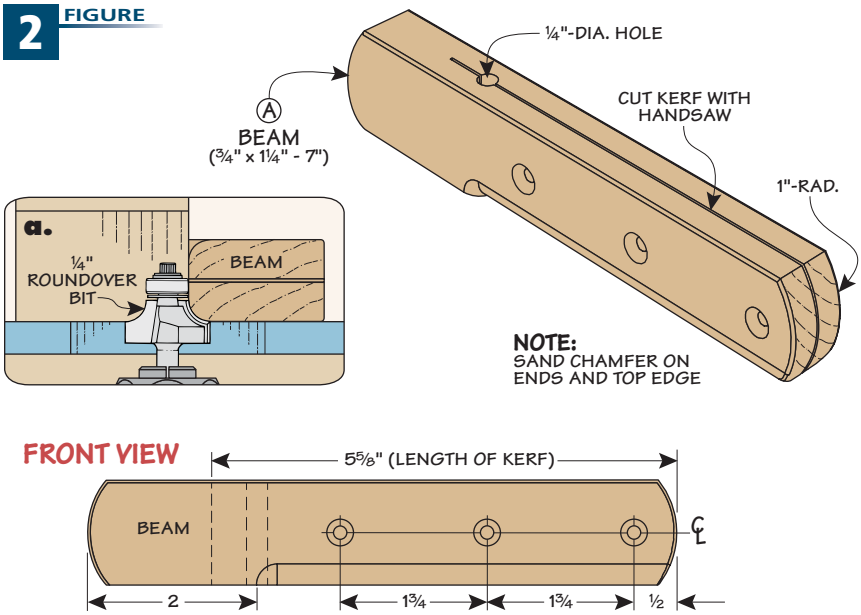


## MATERIALS & SUPPLIES

| | | |
|---|---|---|
| **A** | Beam (1) | ¾ x 1¼ - 7 |
| **B** | Fence (1) | ¾ x 2½ - 4 |

- (3) #8 x ⅝" Fh Brass Woodscrews
- (1) ¼"-20 x 2½" Rh Brass Machine Screw
- (1) ¼"-20 Brass Wing Nut
- (Var.) ¾" x 2" Steel Cutter (.032" thick)

# making the **Fence**

The other half of the scratch stock is the fence. It captures the beam in a shallow dado. A slot in the dado allows you to adjust the position of the fence in relation to the cutter with a machine screw and a wing nut.

At first glance, it might seem that the scalloped shape of the fence is just a traditional design detail. But there's more here than meets the eye. The wide flat edge of the fence is used to guide the cutter on straight workpieces. To profile curved parts, you can turn the fence around and use the rounded edge. This narrower point of contact allows you to follow the edge of curved parts.

As you might imagine, it doesn't take much effort to make the fence. But there are a few items that deserve a closer look.

**SHALLOW DADO.** The first of these is cutting the dado that holds the beam, as in Figures 2 and 2a. I cut the dado at the router table with a straight bit. To make it easier to ride along the fence during the cut, I started with an extra-wide blank cut to final length (mine was 4" x 4"). I used a ⅝"-dia. bit to sneak up on a smooth-sliding fit. In addition, the router bit leaves a flat-bottomed dado that doesn't require any cleanup work.

**ADJUSTMENT SLOT.** After cutting the blank to final width, fit the beam in place and use a ¼" brad point bit to locate the center of the adjustment slot. I used the same bit to drill a series of holes to rough out the slot. The details are shown in the Top View below. Then a chisel makes short work of smoothing out the edges of the slot.

I cut the fence to shape at this point. Here again, the band saw is the right tool for the task. With a little bit of sanding, the saw marks will disappear and you'll end up with a smooth, even curve.

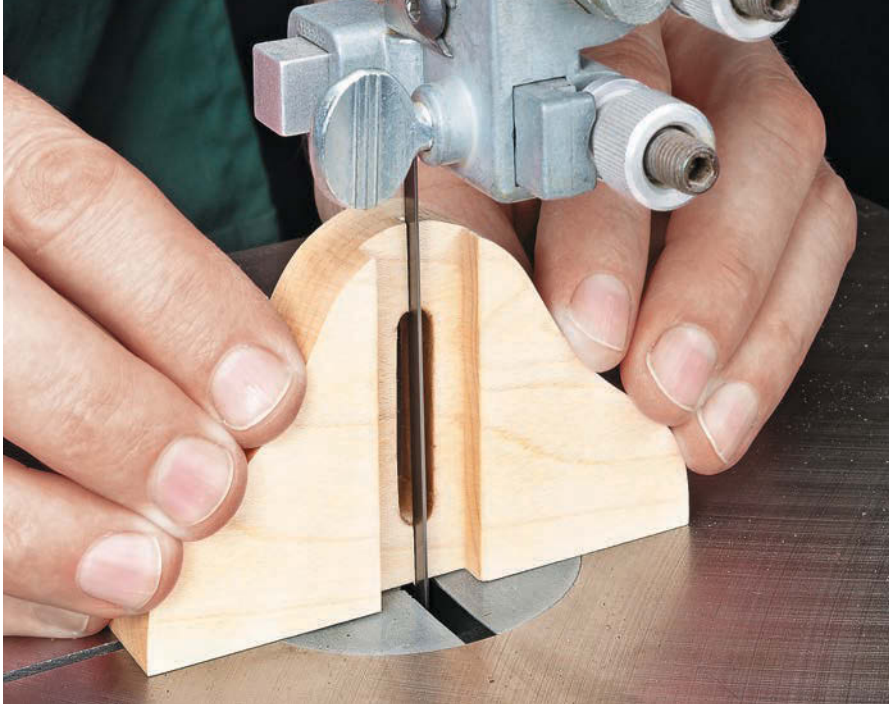

**A Shallow Kerf.** A kerf in the fence allows you to "bury" a portion of the cutter for shaping the edge of a workpiece. To make it, stand the fence on edge and feed it into the band saw blade. The kerf only needs to be about 3/16" deep.

**KERF.** There's one final detail on the fence that's easy to overlook. And that's a shallow kerf in the center of the dado (Figure 2a). This allows the cutter to be recessed in the fence when profiling the edge of a workpiece. The photo above shows how it's done.

**FINISH.** A fine, shop-made tool like this deserves a good finish. I started by applying dye to bring out the figure and add some color. You can read more about this process at *WoodsmithSpecials.com*.

Once the finish is dry, you can assemble the scratch stock. Press a brass machine screw up through the fence and through the beam. Then fix it in place with a wing nut. Matching brass screws can be driven into the holes in the beam to hold the cutter. Speaking of which, the only thing you need now is a set of cutters. The box at right has all the details.

**3 FIGURE**

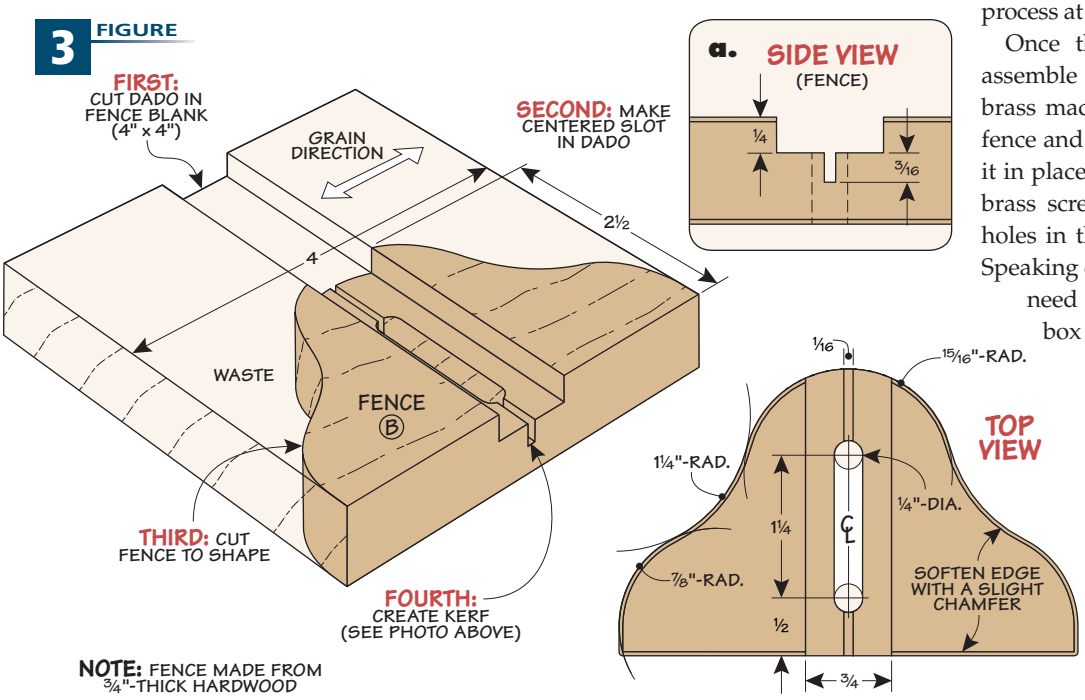


NOTE: FENCE MADE FROM ¾"-THICK HARDWOOD

GO 2 Online Extras

To learn about the finish used on the scratch stock, go to:

WoodsmithSpecials.com

# Creating the Cutters

Before you can put your scratch stock to work, you need some cutters to create the profiles. You have two options for the cutters. You can purchase a set or you can make your own. On page 98, you can find sources to buy cutters that will work with this tool.

To get you started on making your own profiles, I've included nine common scratched profiles that are a cinch to make. You can pick and choose which ones you want and save the other patterns for later. Better yet, you can use these as a jumping off point for creating your own custom profiles — ones you won't find in a router bit catalog. Then, in the photos at right, you can see an overview of the process used to make a cutter. I want to go into detail on a few of the steps.

**The Steel.** The metal used for the cutters needs to have a combination of qualities. It should be easy to shape but tough enough to hold the profile during use. I've found the steel from a card scraper to be ideal.

**Make a Blank.** For the cutters shown below, start by snapping the scraper into ¾"-wide blanks. I do this by placing the scraper in a bench vise. I like to add copper faces to the vise to avoid marring the cutter. Then I use a hardwood block and a hammer to bend it over until it snaps, as you can see in the upper right photo.

**Pattern or Trace.** With the blank in hand, the next step is to cut out the profile pattern and attach it to the blank with spray adhesive. (To get double duty out of your cutters, you can shape a profile on each end.)

For custom profiles, you can apply a coat of layout fluid to the cutter blank. Use a scribe to trace an existing molding or use plastic circle templates from an art store.

**Shape the Profile.** To shape the cutter, clamp it in a bench vise and use an assortment of files to work your way down to the lines. And clamp it as close to the profile as you can to eliminate flexing.

Although this sounds like tedious work, it's not. In less than five minutes, you can create any of the profiles shown here.

The key to shaping the profiles is to keep the file perpendicular to the faces of the cutter. The file strokes leave a burr on the backside of the cutter. Crisp, sharp edges make the cutter work more effectively, so you need to remove this burr. This step also allows you to scrape with both sides of the cutter. To do this, I hone each face on some 220-grit sandpaper glued to an MDF block. Now, your cutter is ready for action. Go online to learn how to create crisp profiles with a scratch stock.

**Snap.** Use a hardwood block and a hammer to snap the cutter blank to size.

**Filing System.** It takes just a few minutes to file the cutter to shape.

**Hone Faces.** For crisp edges, hone each face of the cutter on 220-grit sandpaper attached to an MDF block.

## CUTTER PATTERNS

(SHOWN ACTUAL SIZE)

¼" x ¼" GRID SHOWN

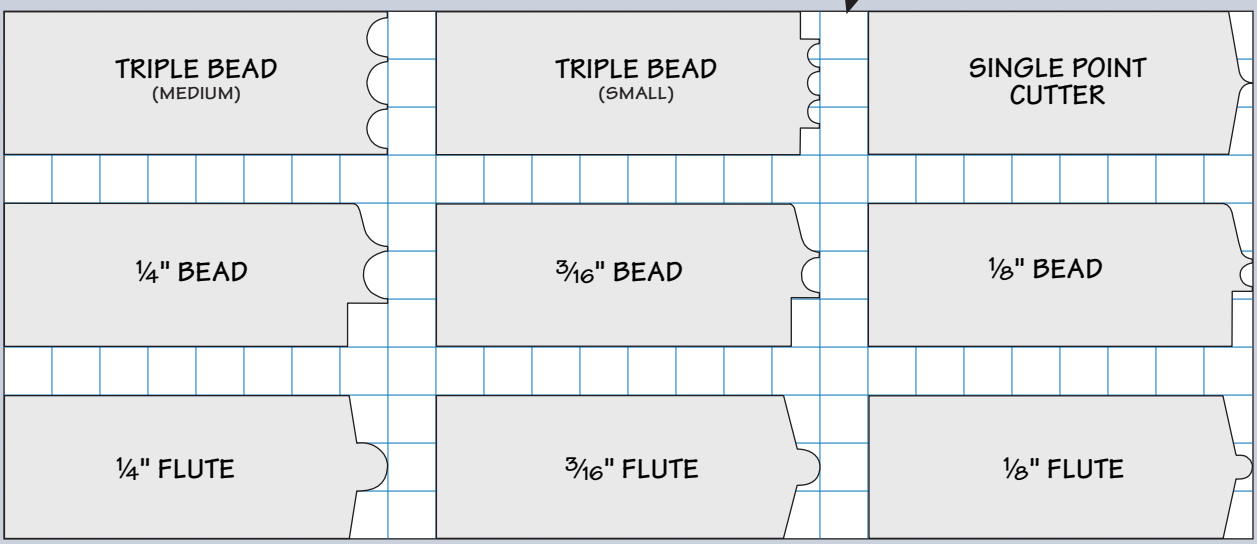

# hand Plane

A simple design and a unique method of securing the blade make building this plane an easy alternative to a traditional wood plane.

**Precision Work.** With careful attention to detail during construction, you'll be making razor-thin shavings in no time.

There's no question about it. I have an incurable weakness when it comes to hand planes — especially wood planes. There's just something special about the look and "feel" of a wood-bodied plane. The problem is that making a traditional wood plane and fitting the blade correctly can be time-consuming work.

So we designed a small hand plane that combines the look and feel of a wood plane with a simple, straightforward method for holding the blade, as shown in the main photo. The result of all this is you can build the plane in the morning and be making shavings in the afternoon.

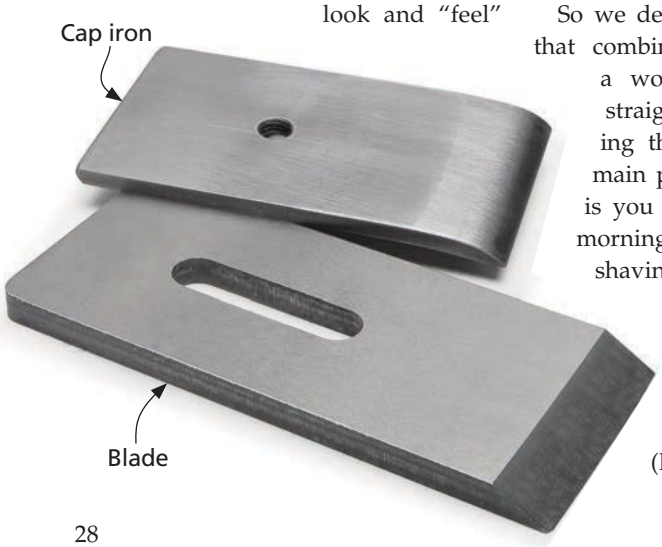


**BLADE.** I started with a 1½"-wide blade manufactured by the *Hock Company* (left photo). As with other *Hock* blades I've used, it's made of high-quality steel and holds an edge extremely well. And like most bench plane blades, it comes with a cap iron as part of a matched set. See Sources on page 98 for more information.

But even a quality plane blade won't work well unless it's sharp. So before starting on the plane, I took a few minutes to get a nice, sharp edge. (For more on sharpening, see page 96.)

## MATERIALS & SUPPLIES

| | | |
|---|---|---|
| **A** | Front Block (1) | 1 9/16 x 2½ - 2 |
| **B** | Back Block (1) | 1 9/16 x 2½ - 4½ |
| **C** | Sides (2) | ⅛ x 2½ - 7 |
| • | (1) 1½" Cap Iron and Blade Set | |

**CORE.** After sharpening the blade, I started work on the core of the plane. It consists of two wedge-shaped blocks, as shown at right. When the sides are added later, the blade fits in the opening created by the two blocks.

Both blocks start out as a single hardwood blank. I used a piece of hard maple. The thickness of this blank determines the width of the opening for the blade. To allow for some side-to-side blade adjustment, the blank is 1/16" thicker (1 9/16") than the width of the blade (1 1/2").

**CUT BLOCKS.** To provide room inside the plane for the shavings, the front block is cut at a 70° angle. The angle of the back block determines the cutting angle of the blade. For all-around use, I cut it at a 40° angle and then trimmed the block to length (Figure 1, below).

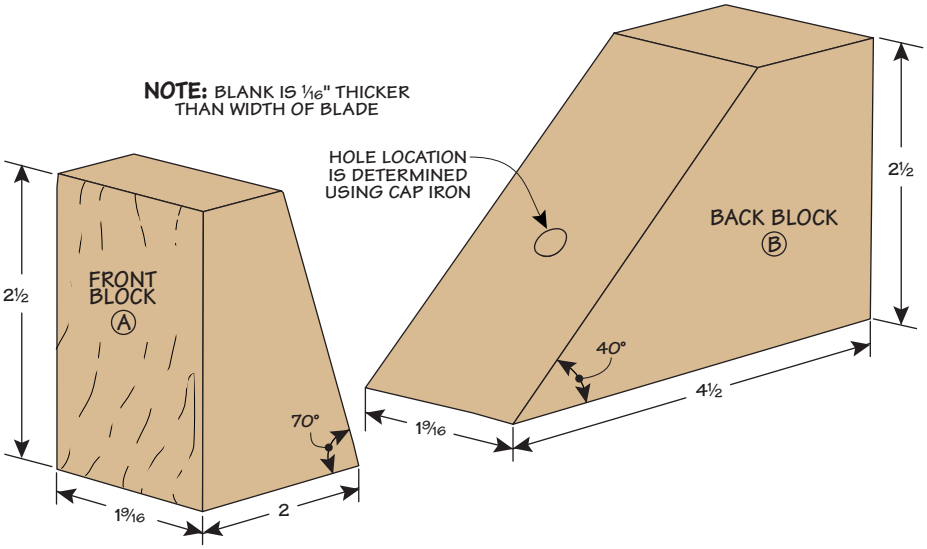


## MOUNTING SYSTEM

The next step is to provide a way to mount the blade. This is where I took a slight detour from the traditional approach. Instead of a wood wedge that exerts pressure from above, the blade is "screwed" to the back block from below.

The secret is a socket head cap screw. It passes through a hole in the back block and into the threaded hole in the cap iron. Tightening the screw draws the cap iron tight against the blade and locks it in place.

**EXIT HOLE.** In addition to securing the blade with a screw, the procedure for locating the hole is also a bit unusual. The first step is to find the point where the drill bit will exit. To do this, position the cap iron so the tip is located just behind the cutting edge, as shown in Figure 2. Then mark the location of the hole with a brad point bit.

Once the exit point is established, the trick is knowing where to start drilling in the bottom of the block. This depends on the distance from the tip of the block to the mark. The idea is to clamp a stop block this same distance away from the centerpoint of the bit (Figure 3). Then, with the tip of the block against the stop, drill a counterbored shank hole.

# How-To: Shape the Body

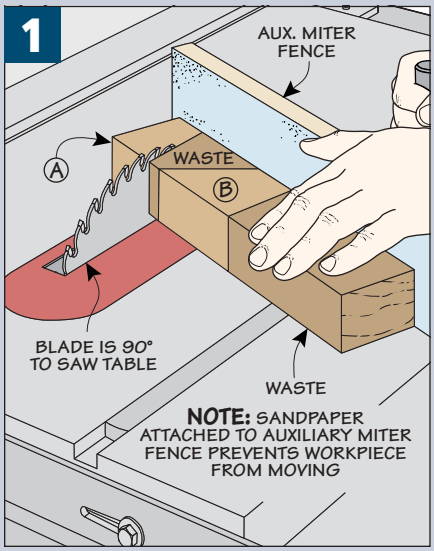


**Cut the Blocks.** From an oversized workpiece, cut the front and back blocks to size at the table saw.

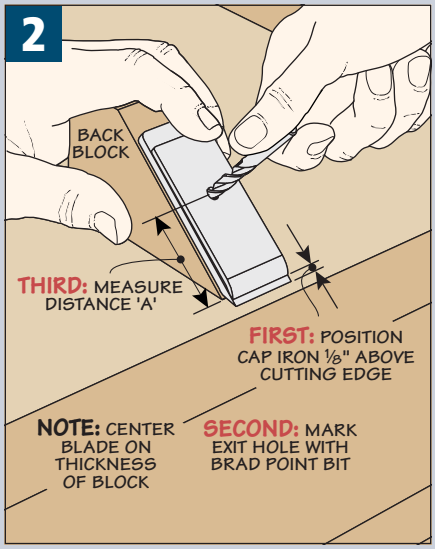


**Locate Hole.** Use the cap iron and a brad point drill bit to locate the hole in the top of the back block.

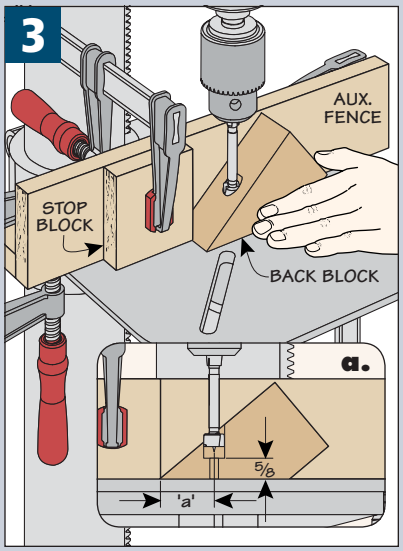


**Drill Hole.** Use an auxiliary fence and a stop block at the drill press to accurately drill the hole in the back block.

# the Sides

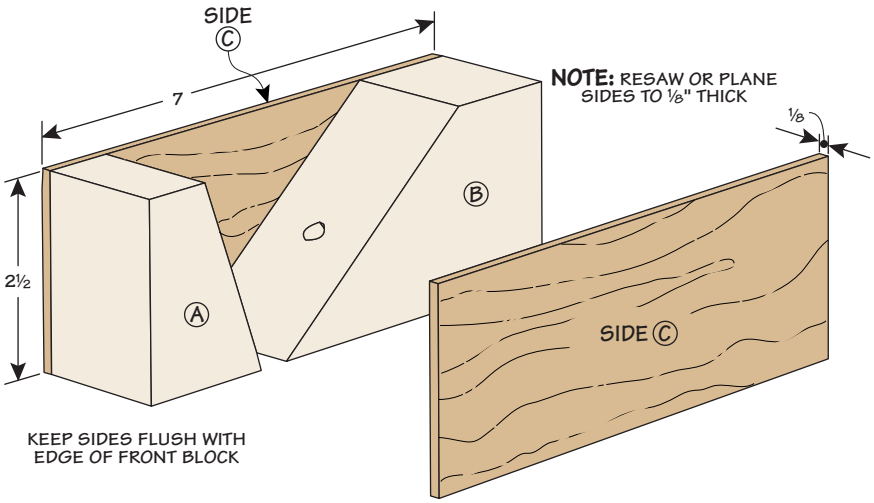


After completing the core, work can begin on the sides of the plane. The sides are just thin strips of hardwood that hold the front and back blocks together.

Although any hardwood would work here, it's the perfect opportunity to experiment with an unusual or highly figured piece of wood. I chose a piece of curly maple for the sides.

Regardless of the wood you use, each side starts out as an ⅛"-thick blank that's cut to a rough length of 7", as shown at right. Attaching these blanks to the front and back blocks does two things. First, it creates the opening for the blade. Second, it forms the sole (bottom) of the plane.

**SOLE.** The sole keeps the blade a consistent distance from the workpiece. So in order to produce an even cut, it needs to be as flat as possible. To ensure that it's flat, I used the top of my table saw to align the bottom edges of the sides and blocks, as shown in Figure 1, below. Note that I used a piece of waxed paper to protect the top from glue squeezeout.

## ASSEMBLY

To avoid having to align all the parts at once, I assembled the plane one block at a time. This makes it easier to check that the sides are straight and square.

**FRONT BLOCK.** I attached the front block first. After applying glue to the sides of the block, it's just a matter of clamping the sides around it so they're flush at the end (Figure 1).

**THROAT OPENING.** When the glue dries, you're ready to add the back block. The position of this block creates an opening or "throat" in the sole of the plane for the blade as shown in Figure 2a. The idea is to make this opening large enough so shavings don't clog it up, yet small enough to produce a clean cut.

**SET OPENING.** An easy way to establish this opening is to use the blade as a gauge. To do this, temporarily install the blade so the cutting edge is flush with the bottom edge of the back block.

To attach the back block, apply glue to the sides of the block. Then spread the sides apart just a bit as you slide the block forward (Figure 2).

# How-To: Assemble the Body

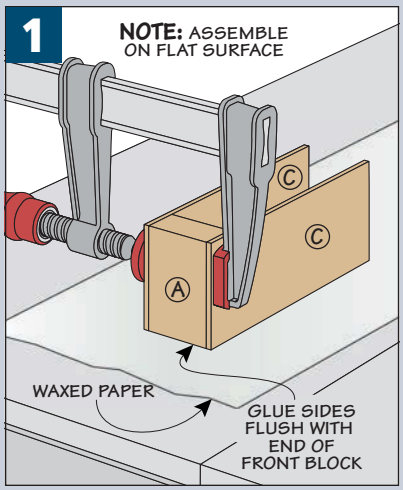


**Staged Assembly.** In order to keep the bottom edges flush, glue the sides to the front block on a flat surface.

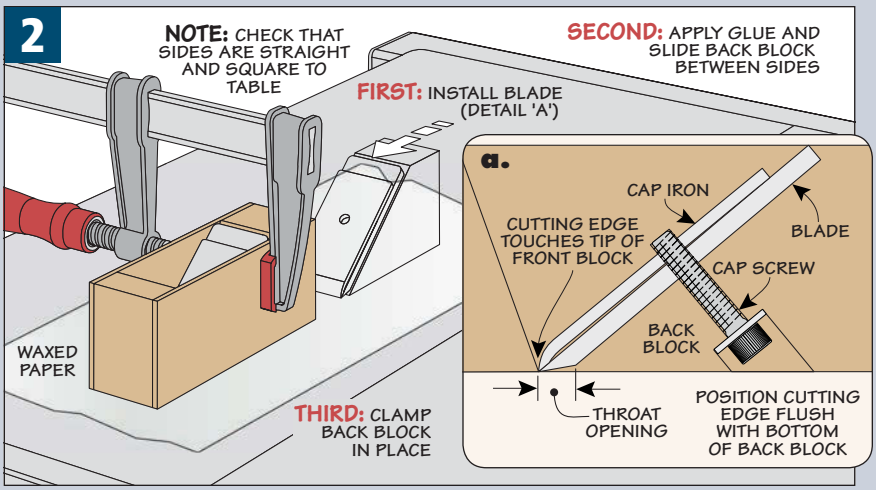


**Adding the Back Block.** Gluing the back block into the body determines the throat opening for the blade. Use the blade and cap iron as a gauge (detail 'a') to help locate the position of the back block.

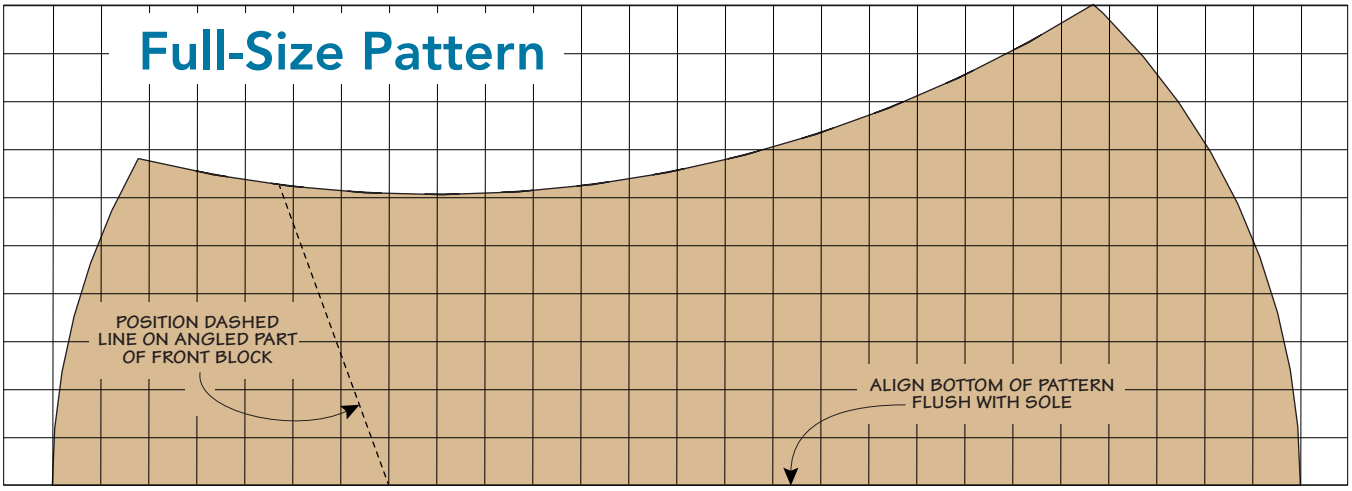


When the cutting edge touches the tip of the front block, clamp the block in place. Then remove the blade and clean up any glue that may have squeezed out.

### SHAPING THE PLANE

With the sides in place, the next step is to shape the body of the plane. I experimented with several different shapes to find the most comfortable grip.

The one I liked best has a rounded back that fits in the palm of my hand. And the curve on the top of the plane lets me apply pressure without having my finger slip off the block. (See full-size pattern above.)

You may prefer to customize your own shape. But if you want to use the pattern shown above without cutting it out of the book, you can reproduce it on a photocopy machine, or go online to *WoodsmithSpecials.com* for a printable pattern.

**PATTERN.** To position the pattern on the side of the plane, there's a dashed line representing the angled part of the front block. The pattern can be attached to the side of the plane with either a spray-on adhesive or rubber cement.

**CUT TO SHAPE.** With the pattern in place, the plane is ready to cut to rough shape. Start by cutting to within 1/16" of the line on a band saw. The details are shown in Figure 1, below. Then use a sanding drum on the drill press to sand up to the line.

**CROWN.** There's just one more thing to do to complete the basic shape, and that's to file the sharp corners off both ends of the plane to form a gradual crown (Figure 2). To raise the plane to a comfortable working height, I clamped it in a handscrew that's held in a vise.

**SAND SMOOTH.** All that's left to do is to sand the plane smooth. An easy way to sand the ends is to use a strip of sandpaper and "buff" the plane, as if you're shining a pair of shoes, as shown in Figure 3.

## How-To: Shape the Body

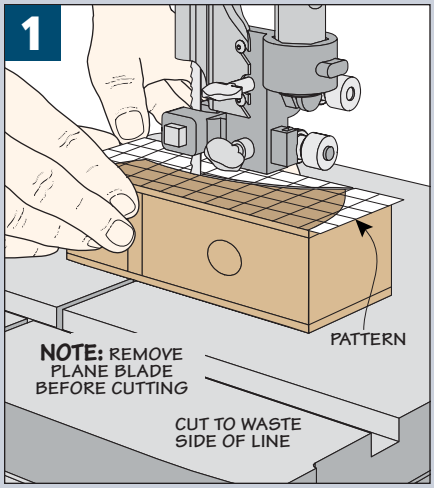


**Cut it Out.** Staying to the waste side of the pattern line, cut the body to shape. Then sand up to the line.

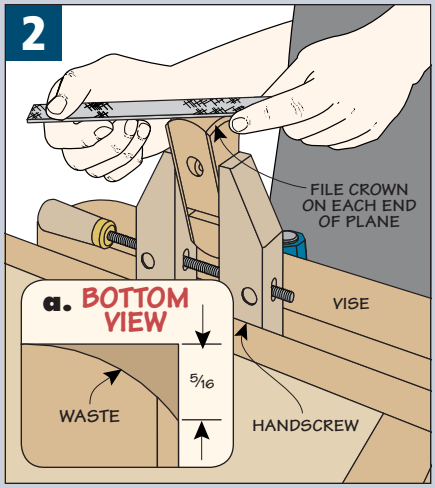


**Hand Shaping.** Use a file to shape the ends of the plane. Detail 'a' shows the shape you are aiming for on each end.

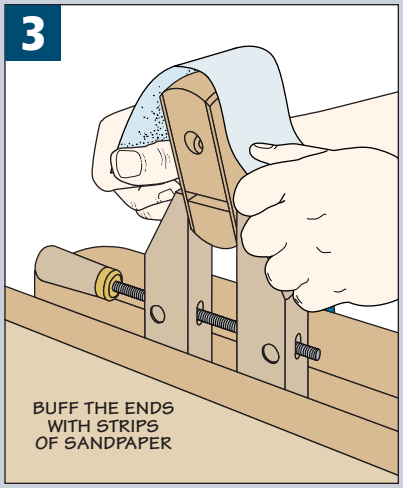


**Hand Sanding.** Cut several long strips of sandpaper in different grits. Then "buff" the ends of the plane smooth.

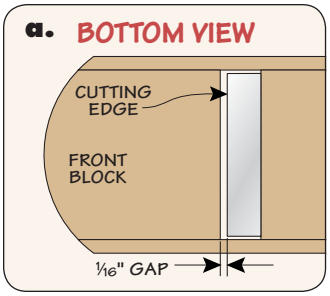


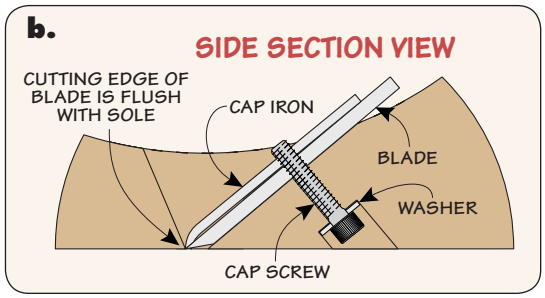


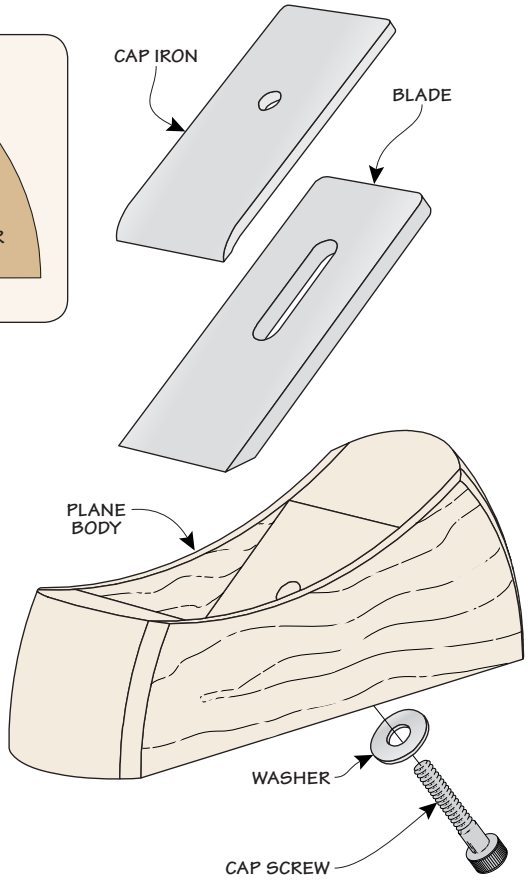


# tuning the **Plane**

Like any plane (wood or metal), this hand plane needs to be tuned up before you can use it. This takes a little patience. But the satisfaction you'll get seeing thin shavings curl off a workpiece is worth the effort.

### TRUE THE SOLE

The key to this tune-up is to "true" the sole (bottom) of the plane so it's good and flat. This does two things.

First, it ensures that the plane rides evenly across a workpiece, so you end up with a smooth, consistent cut. Second, it enlarges the throat opening for the blade.

**SAND BOTTOM.** To flatten the sole, I place a piece of fine-grit sandpaper on a flat surface (like a table saw). Note: To prevent the plane from rocking, clamp a board 90° to the saw table as shown in Figure 1, below.

Now it's simply a matter of "scrubbing" the plane back-and-forth across the sandpaper. To avoid sanding too much (and opening up the throat too wide), it's a good idea to check your progress frequently.

**CHECK THE OPENING.** The idea is to make the throat opening in the sole just large enough so shavings don't clog up the plane. To check this, install the blade so the cutting edge is flush with the sole (detail 'b', above). What you're looking for here is a 1/16" gap between the tip of the front block and the blade as shown in detail 'a,' above. If the gap isn't wide enough, remove the blade and continue sanding.

**SQUARE OPENING.** Once the throat opening is established, there's just one more thing to check. That's to see if the front edge of the opening is square to the sides (Figure 2). If it's not square, remove the blade and carefully make a few light passes with a file (Figure 3).

## **How-To:** Prepare the Plane for Use

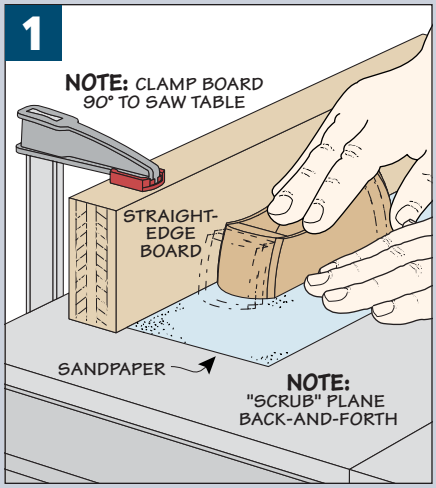


**Flatten Sole.** Using a straightedge board clamped to the saw table as a guide, sand the bottom of the plane.

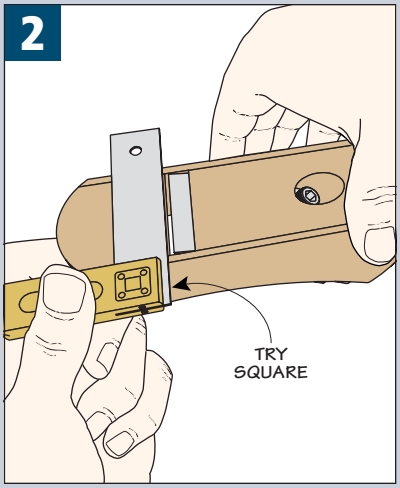


**Check for Square.** Next, use a small square to check that the throat is still square to the sides of the plane body.

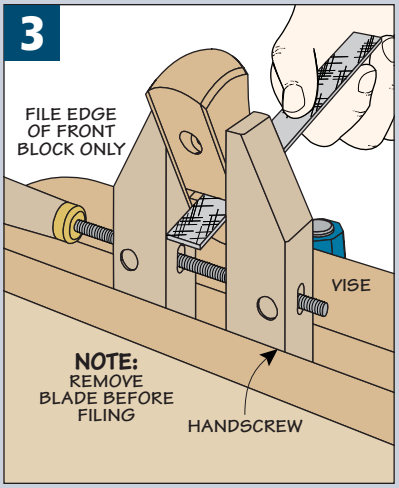


**Make Adjustment.** If needed, use a file to gently remove material from the front block, returning the throat to square.

**FINISH.** Finally, to complete the plane and protect the surface from getting dirty, I applied a couple coats of an oil finish. I used tung oil, but other oil finishes will work, as well.

### ADJUSTING THE BLADE

As with any plane, the secret to getting paper-thin shavings is to use a sharp blade, and adjust it so the cutting edge is just a whisker below the sole of the plane.

I start by roughly positioning the blade, as shown in Step 1. To hold it in place, the cap screw is tightened with an Allen wrench so the blade is snug (photo at right).

**FINE-TUNING.** Before fine-tuning the blade, I make a trial cut. Depending on the thickness of the shaving, the blade can be raised (or lowered) by tapping the plane with a wood on non-marring mallet.

To make a shallower cut, tap the back end of the plane body (Step 2). Tapping the front of the plane moves the blade forward for a deeper cut.

**SQUARE BLADE.** If you need to square the blade, the process is slightly different. The "high" corner of the blade is dropped into the cutting position by tapping on the opposite side of the plane as you can see in Step 3.

**Securing the Blade.** The blade is held in place by tightening the socket head cap screw with an Allen wrench.

## How-To: Adjust Blade for Use

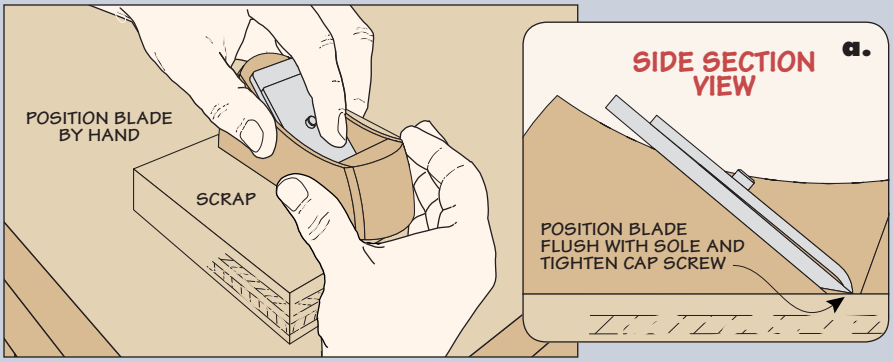


**1 Position the Blade.** The blade is positioned so the cutting edge is flush with the sole. Then the cap screw is tightened with an Allen wrench until the blade is snug. This pulls the cutting edge down just below the sole of the plane.

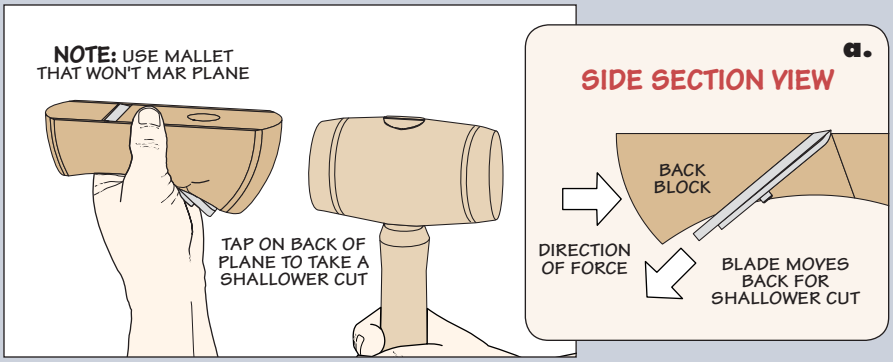


**2 Adjust Depth of Cut.** After making a trial cut, you may need to adjust the depth of cut. To make a shallower cut, tap on the back of the plane with a mallet. To make a deeper cut, tap the front of the plane.

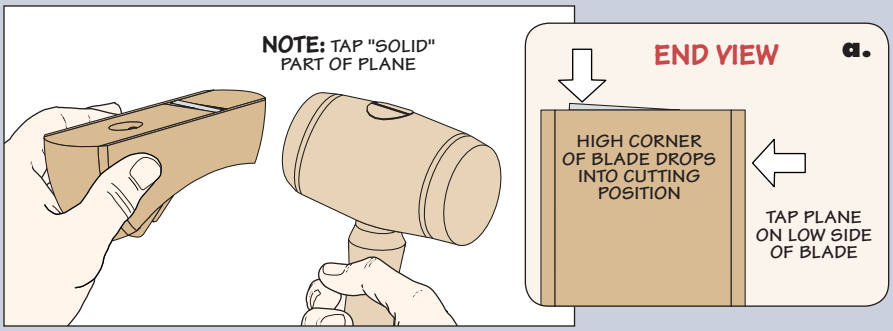


**3 Square the Blade.** To maintain a consistent depth of cut across the width of the blade, the cutting edge should be parallel with the sole. Striking the opposite side of the "high" corner drops the blade into the cutting position.

# custom Sanding Block

Some scrap wood and a few simple steps are all it takes to build this basic, must-have shop tool.

One of the most basic tools every shop needs is a simple sanding block. I've used everything from a piece of scrap wood to a specially manufactured block to get the job done. But none of them ever really had the features I needed, so I built the custom sanding block you see in the photo above.

This sanding block provides a good secure grip and still fits comfortably in my hand. Plus, the size and shape provide good visibility of the surface being sanded and allow me to get into even the tightest corners with ease.

It's made from pine so it's lightweight. This means less fatigue during long periods of sanding. And finally, the block lets you use either standard or self-adhesive sandpaper.

**SHAPING THE BLOCK.** Building the sanding block is a snap. All you'll need are two pieces of pine — one ½"-thick piece for the base and a second 2"-thick piece to form the handle. Then you'll need to clamp the blocks together and trace the pattern shown below on to them.

I made a trip to the band saw to cut the inside curve for the handle. Then it was a simple matter to glue the two

**1 FIGURE**

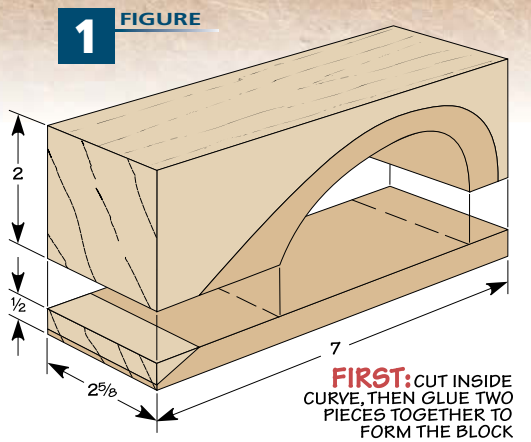


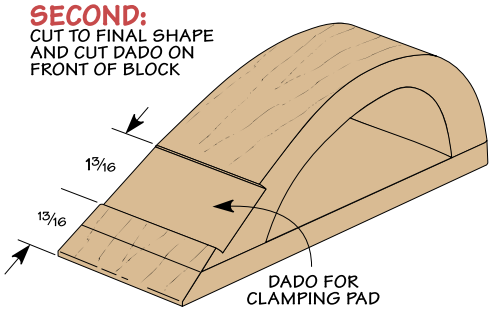


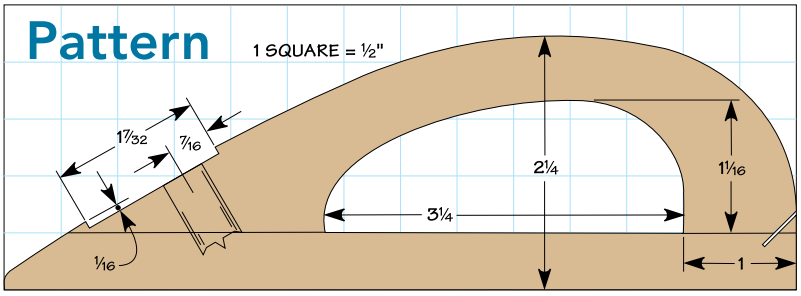

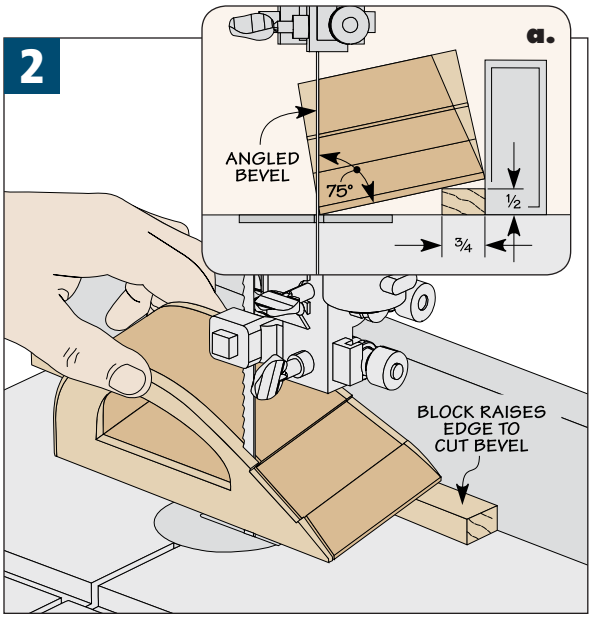


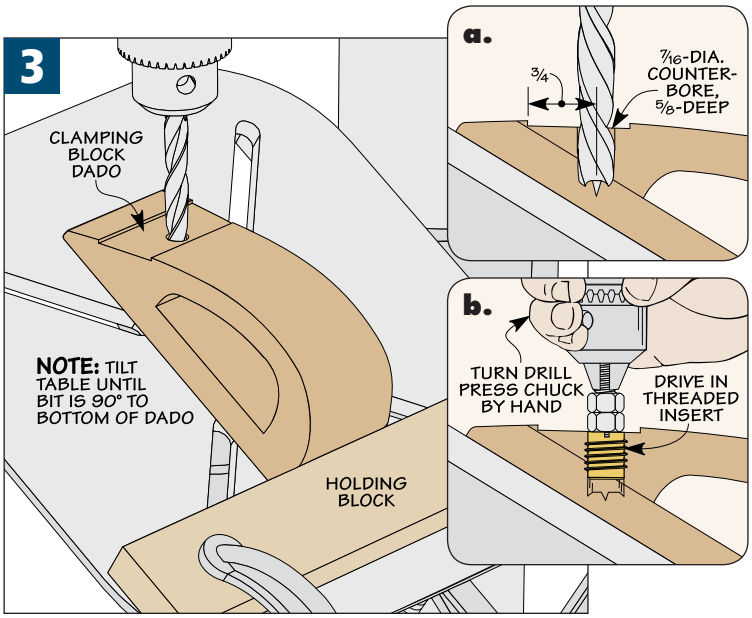


pieces together, like you see in Figure 1 on the previous page. Now you can use the band saw again to cut the outside shape of the top of the block. Finally, sand the top and bottom to provide a smooth look and feel.

**CLAMPING PAD DADO.** To keep the sandpaper tightly stretched over the block, you'll need to secure the sandpaper in place at the front. For this, all you need to do is cut a shallow dado to hold the clamping pad across the front of the block. I did this by making two shallow cuts at the band saw to define the edges and then cleaning out the waste with a sharp chisel.

**BEVEL THE SIDES.** Since one of the goals of this project was to be able to sand into a corner without my fingers getting in the way, I beveled the sides of the block. This was easy. I just used a small piece of scrap to raise one edge of the sanding block to the desired bevel angle, like you see in Figure 2, and then cut both sides with a couple of quick passes of the band saw. Once this is done you're ready to make a clamping pad to hold the sandpaper in place at the front of the block.

**CLAMPING PAD.** Since you've already cut the dado, all you need to do is install a threaded insert to hold a clamping pad and knob in place. I used my drill press to first drill a hole at 90° to the dado as shown in Figures 3 and 3a. Then install the threaded insert (Figure 3b).

For the clamping pad, I used a piece of ¼" hardboard that I cut slightly narrower (1/32") than the dado. To provide some "grip" so the sandpaper wouldn't slip around during use, I added a small piece of sandpaper along the lower edge of the clamping pad.

**BACK SANDPAPER SLOT.** You'll also need to hold the sandpaper in place at the back of the block. This is done by simply cutting a small slot at the back of the block as shown in Figure 4a. You'll find a thin-kerf hand saw works great for this. Just make a cut at 45°and then pass a piece of sandpaper through the slot a few of times until the sandpaper slides easily in place.

**CORK BASE.** I added a cork base to the bottom of my block. The cork provides a nice base and helps keep the sandpaper from slipping around as you sand. You can use other materials, such as felt or rubber, for this as well.

I used a spray adhesive to attach the cork. This way, I didn't have to worry about any glue squeezing through the porous cork when I attached it to the bottom of the sanding block.

**USING THE BLOCK.** Now, all that's left is to install the sandpaper. Since the block accepts a quarter sheet of sandpaper, this is easy. Just trim the sheet, slip one end in the back groove, and secure the other end under the front clamping pad and tighten the knob.

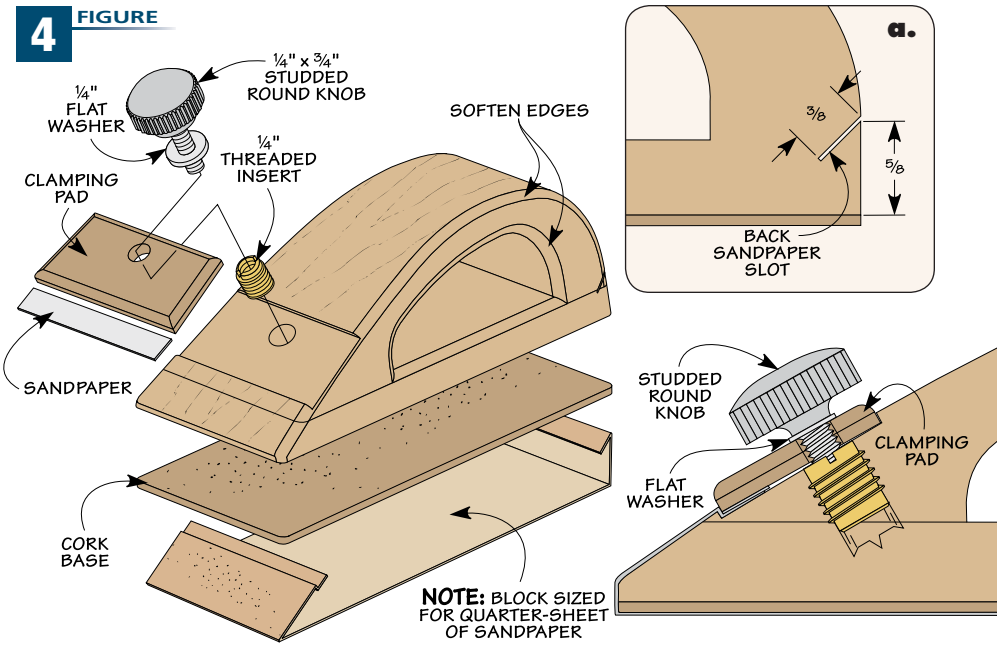

# handsaw Miter Box

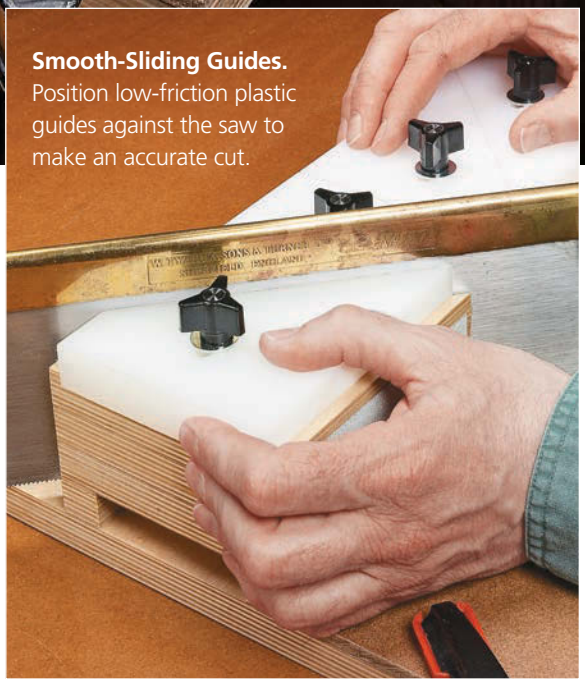

**Smooth-Sliding Guides.** Position low-friction plastic guides against the saw to make an accurate cut.

## This handy jig makes it easy to get perfect cuts in small pieces.

Cutting small pieces like delicate molding or thin glass stop poses some unique challenges. Since the pieces are often very small, they can be hard to hold down and cut safely at the table saw or miter saw. But it's important that each piece is cut accurately for a tight fit.

For this reason, I usually rely on a handsaw and a miter box. Now, I'm not talking about the cheap, plastic miter boxes you find at hardware stores. The wide slots in these miter boxes don't do a good job of guiding the saw. Instead, I made the miter box you see in the photo above. (You'll find a version for a Japanese saw on page 39.) To guide the saw, a set of low-friction guides press against the body of the saw plate without binding (inset photo). The results are safe, accurate cuts.

Besides precision cuts, this miter box has another key advantage — simplicity. You can build it and start using it in one easy afternoon in the shop.

## BUILD THE FENCE

The miter box is made up of two components — the adjustable fence and the base. The most important part is the fence. So that's where I began building it.

The fence has two roles. First, it provides a wide, flat face to fully support the workpiece. The second role is to guide the saw accurately during the cut.

**PLYWOOD FENCE.** To handle each of these tasks, the fence is made from two different materials. To support the workpiece, the main part of the fence is made from a four-layer, plywood sandwich, as shown in Figure 1. The drawing also shows how the fence is created from a long blank.

When gluing up the blank, the important thing to keep in mind is the front is the reference face for supporting a workpiece. So the edges should be smooth and flat.

**TWO GROOVES.** Before cutting the fence into individual sections, I cut a groove in the top and bottom of the blank. The upper groove is sized to hold a piece of ultra-high molecular weight (UHMW) plastic for the saw guides you'll make later. The other groove creates a sawdust-catchingchannel that keeps dust from building up between the fence and workpiece. I cut both of these grooves in several passes with a dado blade at the table saw, as shown in Figure 1a.

**1 FIGURE**

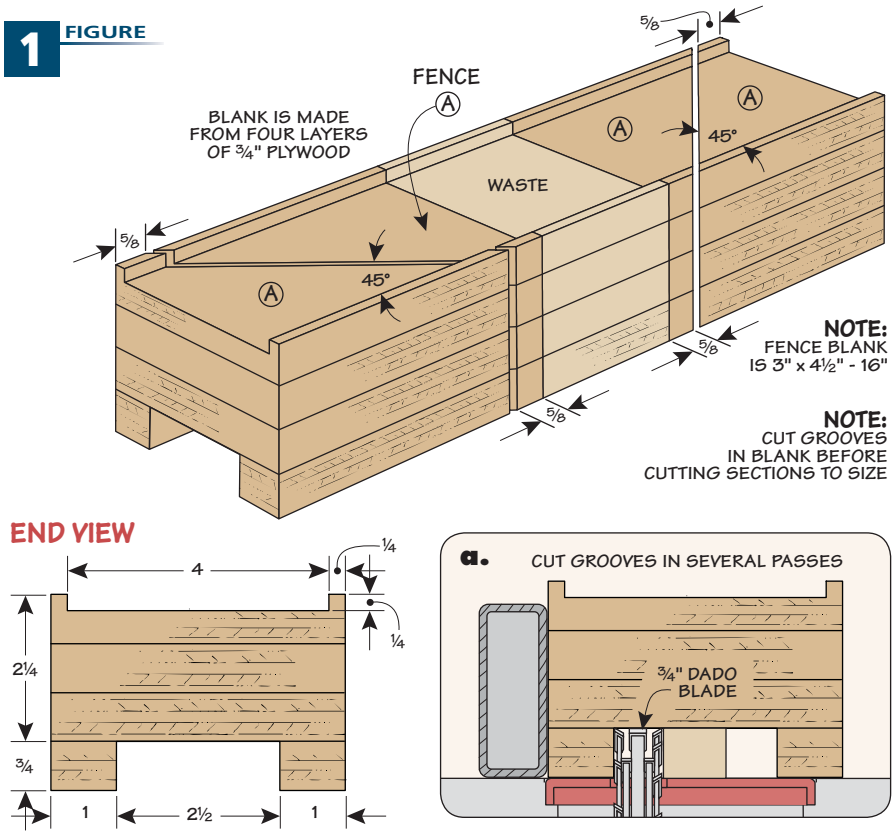


At this point, you can cut the blank into four sections (Figure 2). Cutting a workpiece this thick can be a challenge for some table saws. But since the plywood doesn't guide the saw, the cut doesn't need to be perfect. So I cut the fence pieces at the band saw and then sanded the edges smooth.

The next step is to install a threaded insert in each section. These make it easy to attach the adjustable saw guides.

**SQUARE BASE.** The fence sections are glued to a plywood base (Figure 2). To keep the sections aligned, I attached a piece of hardboard to the base with double-sided tape. It also serves as a replaceable cutting surface. This way, you can "renew" the base when it gets chewed up over time.

**2 FIGURE**

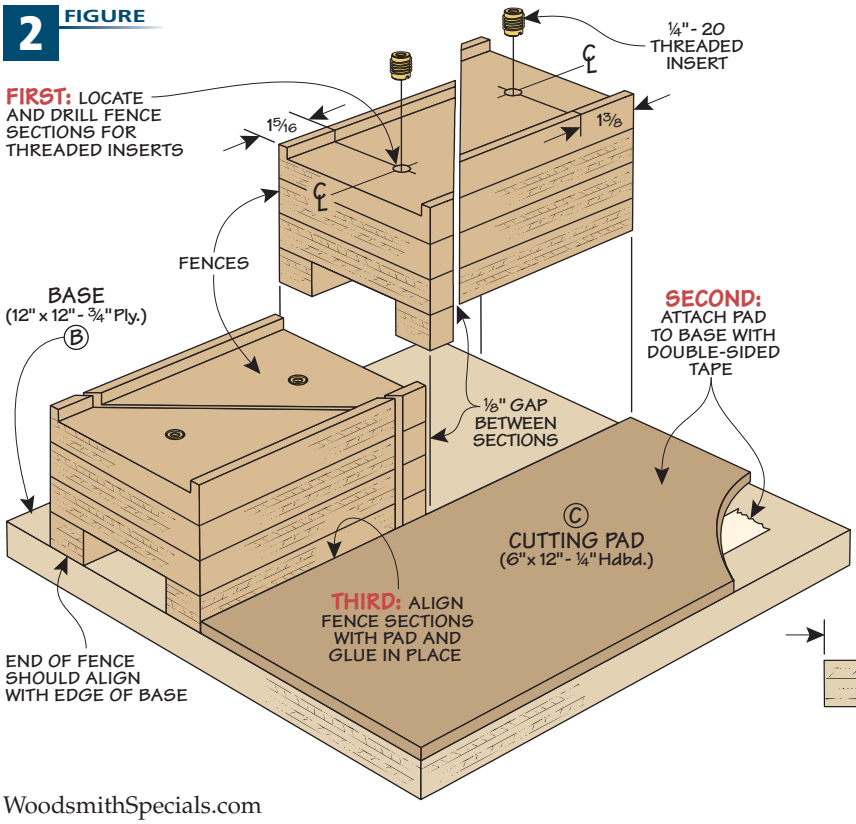


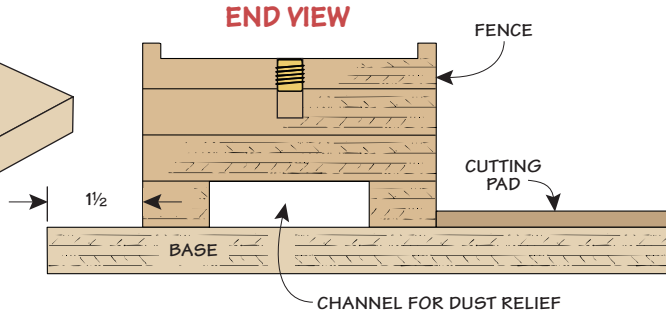

# smooth-sliding **Guides**

I mentioned earlier that the fence served two functions — supporting the workpiece and guiding the saw. Completing the plywood fence sections and attaching them to the base takes care of the first function.

**SAW GUIDES.** For the second, you can turn your attention to the four saw guides. These guides are made from UHMW plastic and keep the saw traveling in a straight, square line.

The saw guides are cut from a long blank, as shown in Figure 3, at right. Each piece has a 45° cut on one end and a 90° cut on the other end.

It's important that these pieces are accurately cut since they actually guide the handsaw during use. So before cutting the guide pieces to size, I took some time to fine-tune the saw blade and miter gauge settings on my table saw to ensure a precise cut.

**ADJUSTMENT SLOTS.** The saw guides are attached to the fence with studded knobs, as in Figure 4. The studs fit in slots that are cut in each guide. To make the slots, I drilled a series of holes at the drill press (Figure 3a). Then I cleaned up the edges with a chisel.

## SETTING UP THE MITER BOX

After attaching the guides to the fence, you need to do a little set up. This customizes the miter box to your saw. Your goal is to have the saw held securely by the guides.

Start by loosening the knobs and slipping the saw into the 90° slot. Slide the adjacent guides against the saw blade, centering it in the slot. After tightening the knobs, move the saw back and forth. The saw shouldn't wobble or be too tight. Repeat the process for the 45° slots — with one difference. Loosen the outer guides only, so you don't alter the 90° setting.

I attached some adhesive-backed sandpaper to the face of the fence (Figure 4). This simple step prevents a workpiece from creeping during the cut. Finally, when inserting (or removing) the saw, keep the teeth below the guides so the teeth don't spoil the faces of the guides. Now you're set to make perfect miters and crosscuts every time.

**3 FIGURE**

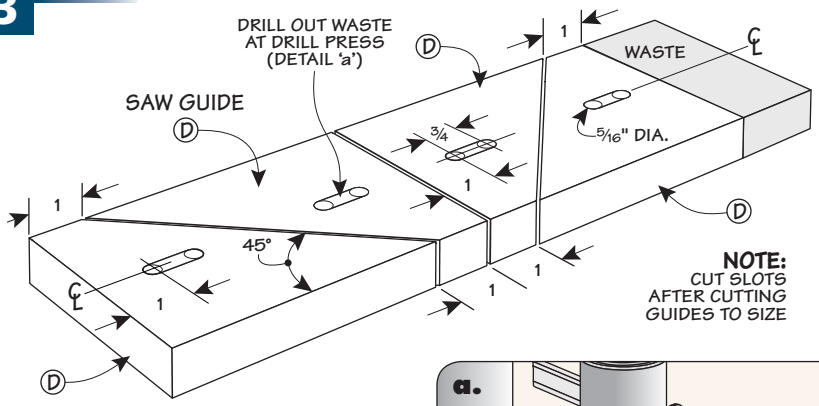


**NOTE:** SAW GUIDE BLANK IS 3/4" x 4" - 14" UHMW PLASTIC

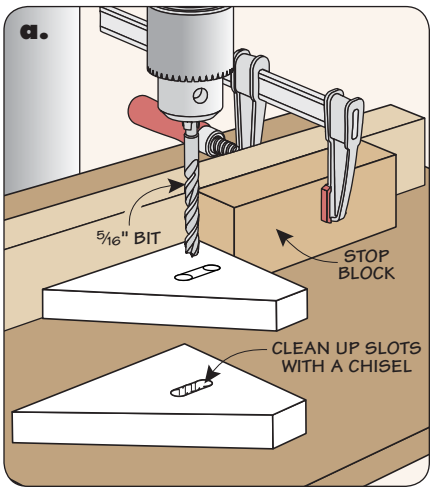


**4 FIGURE**

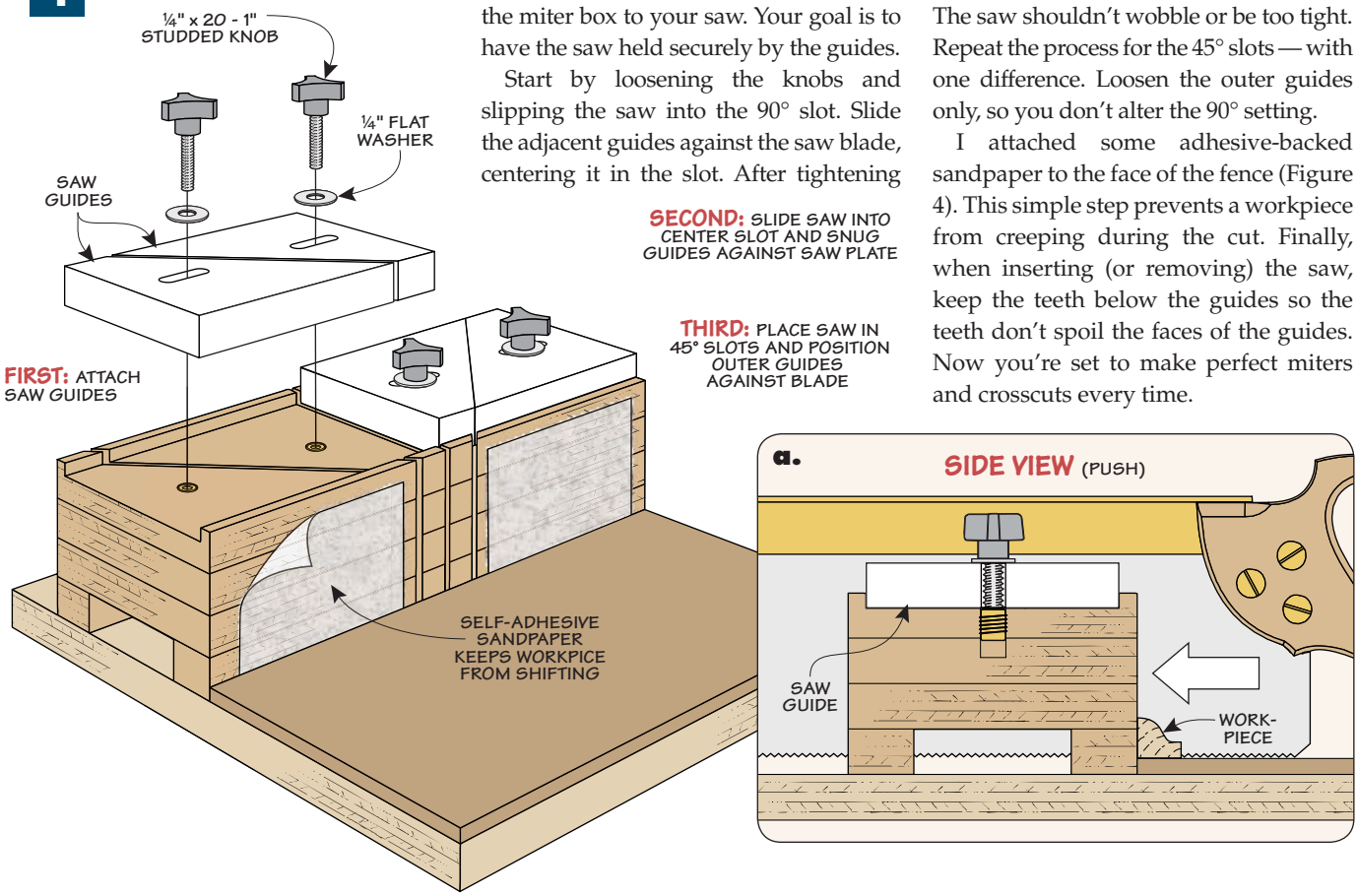

# **Pull Saw** Miter Box

## **Design Option.** You can easily adapt the miter box to work with a Japanese-style pull saw. You'll still get flawless cuts.

The miter box was originally built to be used with a Western-style back saw. But with a few modifications, you can make a version that works with a Japanese-style pull saw, as shown in the photo above.

**Shorter Depth.** The biggest difference between the two saws is the shorter depth of cut found on most Japanese saws. To compensate for this, all you need to do is shorten the height of the plywood fence assembly, as shown in the drawing below. In this case, all I did was reduce the number of plywood layers from four to two. The grooves on the top and bottom are the same. And I didn't change the saw guides, either. There's plenty of adjustment space to account for the thinner blade.

**Using the Miter Box.** The other "modification" you need to make with the Japanese saw version of the miter box is in how it's used. Since a Japanese saw cuts on the pull stroke, the cutting action would pull the workpiece away from the fence. And this could lead to an inaccurate cut.

As you can see in the photo above, the solution is as simple as turning the miter box around and using it "backwards." Now, pulling the saw holds the workpiece firmly against the fence.

You can also see that I clamped the miter box between bench dogs in the face vise. However, securing the miter box to the benchtop with clamps would work as well.

No matter which version of the miter box you choose, you'll find it makes cutting small pieces as accurate (and nearly as quick) as any powered saw.

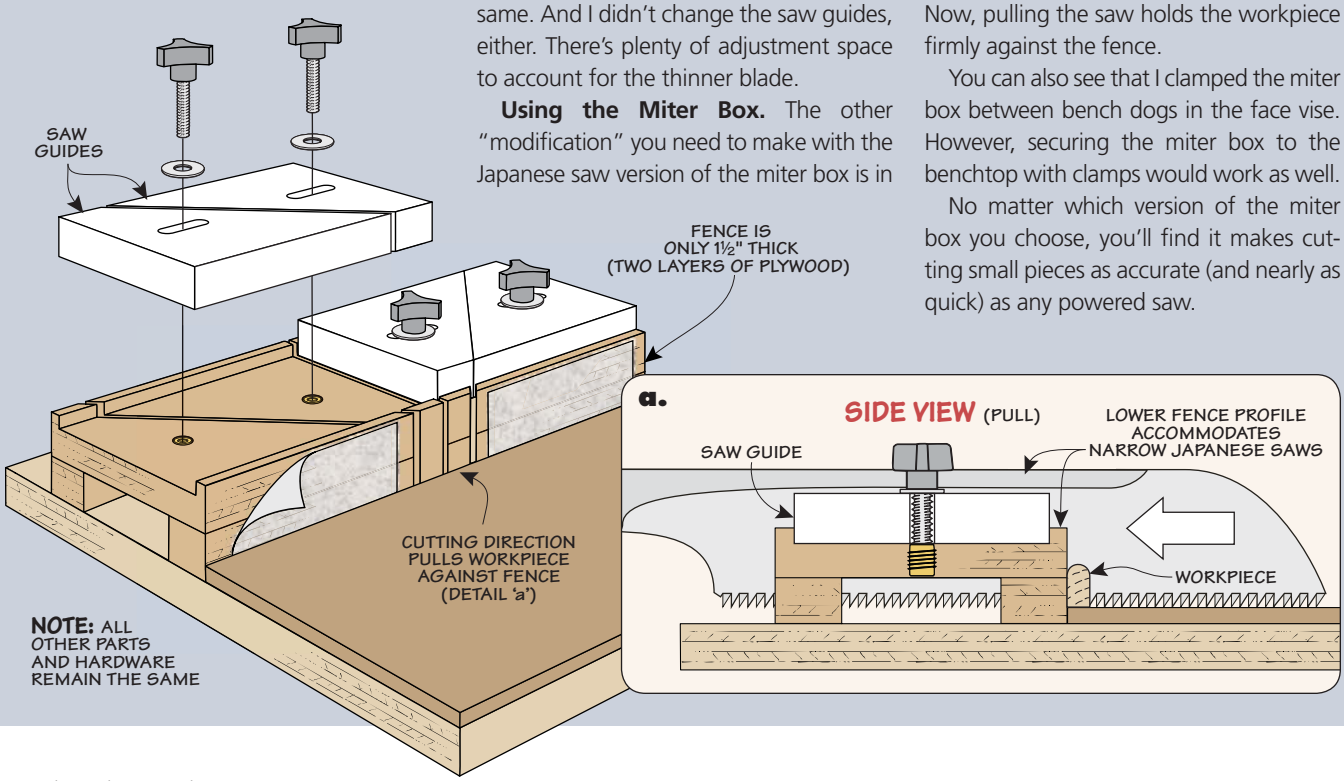

# Layout Tools

Great projects begin with precise layouts. Build these classic layout tools to help get your projects started off on the right path. Several of them can be built and used in the same day.


PRECISION MITER SQUARE.....42

SHOP-MADE MARKING KNIFE.....46

MULTIPURPOSE LAYOUT TOOL.....50

CALIPERS & DIVIDERS SET .....54

CLASSIC MARKING GAUGE.....60

# precision Miter Square

Sharpen your shop skills by making this custom-designed layout tool. The etching on the brass blade will showcase your attention to detail.

Collecting and restoring old layout and hand tools is somewhat of a passion of mine. (Some might call it a sickness.) So I have no shortage of seasoned try squares in my shop. But when it came to laying out 45° miters, I only had one combination square with questionable accuracy. That changed with this attractive shop project shown here.

This miter square is simple to make from a piece of brass stock and wood. The wood handle features a brass end cap to help keep nicks and dings to a minimum. And a finger groove machined on both faces of the handle ensures a solid grip when in use.

Since the handle isn't that large, I was able to use an attractive piece of exotic wood that was an offcut from a previous project. In my case, the handle is made from wenge. The blade and handle are held together with two-piece brass rivets. What like best about this design is that the whole project can be put together in an easy afternoon in the shop.

**DECORATIVE ETCHING.** I also used this project to try my hand at adding a decorative flair to the brass blade. This scroll design is made through the use of an etching technique that requires just a few special "ingredients." These supplies are readily available at most craft stores or online. Check Sources on page 98 for more information. I'll get into the details of the etching process on page 45.

## SHAPE THE HANDLE

The handle of the square requires several steps to complete, making it the logical place to begin construction. I started by cutting a ¾"-thick blank to width, but I left it twice as long as needed for now. This extra length allows it to be clamped in a jig for the first machining operation.

## MATERIALS & SUPPLIES

| | | |
|---|---|---|
| **A** | Handle (1) | ¾ x 1⅜ - 5³⁄₁₆ |
| **B** | End Cap (1) | ⅛" Brass - ¾ x 1⅜ |
| **C** | Blade (1) | ⅛" Brass - 1¼ x 9⅛ |

- (1) ⅛" x 1¼"- 12" Machinable 360 Brass
- (4) Brass Rivets (2-piece)
- (2) #6 x ½" Brass Screws
- (4) ⅛" x 1¼"- 12" Machinable 360 Brass

**FINGER GROOVE.** Having made layout and hand tools in the past, I know that one important objective is to make a tool that's comfortable to hold. With that in mind, I used a simple jig to rout a finger groove on both faces of the handle blank (Figure 1). Set the blank aside after completing the grooves.

**BRASS END CAP.** Now grab your piece of bar stock and lay out the end cap and the two mounting holes. (Be sure to make the cap a little oversized. It gets filed flush with the handle sides after it's attached.) Figure 2 provides the details for drilling the countersunk mounting holes.

The next order of business is to cut the end cap free from the bar stock with a hacksaw. Transfer the hole positions to the end of the handle and drill pilot holes. I then used a dab of epoxy to hold the end cap to the handle while I installed the screws.

After filing the edges of the end cap flush with the handle (and adding a small chamfer on the edges), use a piece of sandpaper on a flat surface to sand everything smooth.

**FINISH HANDLE.** Figure 3 shows how to make the 45° miter on the other end of the handle. You'll then use details 'a' and 'c', above to locate the holes for the rivets used to attach the handle to the blade. I used a Forstner bit to drill the counterbores to recess the rivet heads and then drilled the through holes. I also took this opportunity to sand a slight chamfer on the long edges of the handle blank. Finally, cut the slot in the end of the handle to house the blade. You'll make this cut at the table saw using a cradle to hold the handle at 45° (Figure 4).

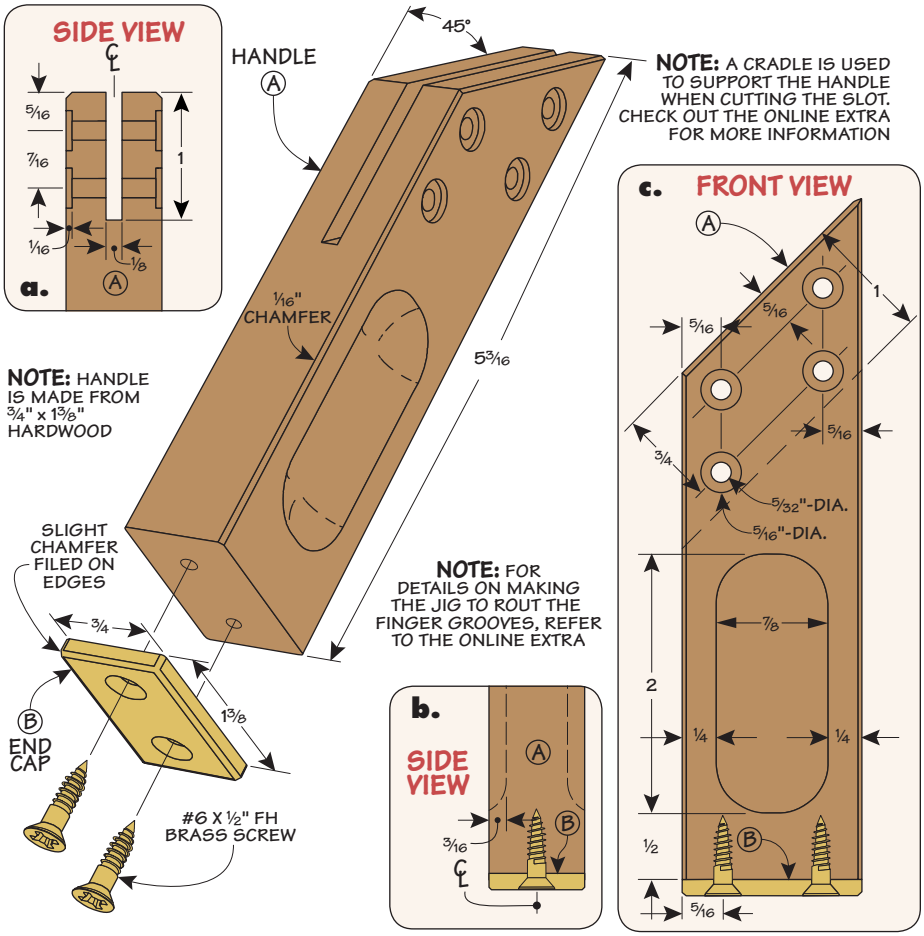


For complete details on routing the finger grooves, go to: WoodsmithSpecials.com

# How-To: Create the Handle

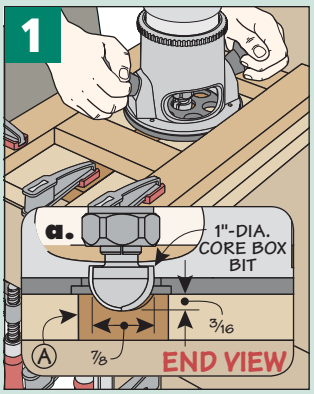


**Finger Groove.** A core box bit and a jig (see the Online Extra) are used to rout the groove.

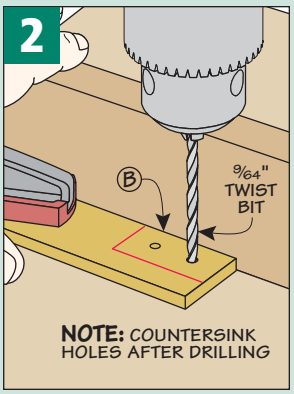


**End Cap.** Drill the holes in an oversized blank before cutting the end cap to size.

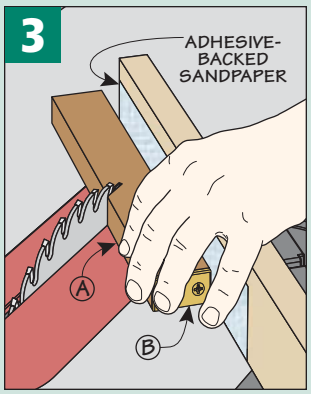


**Shape Handle.** Use an auxiliary miter fence to back up the mitered cut.

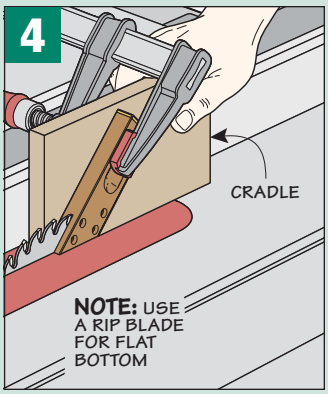


**Centered Slot.** A cradle holds the handle at a 45° angle to cut the blade slot.

# add the **Blade**

Now that the handle for the miter square is complete, you can turn your attention to the blade. Having cut the end cap from your piece of brass bar stock, the first order of business is to cut that end of the blank square again so that the overall length matches the size shown in the drawing at right. I used a table saw blade designed for cutting non-ferrous metals for this step, but a hacksaw would also work.

**BLADE SHAPING.** With the brass stock squared-up, there are just a few items left to complete the miter square. And that starts by mitering the ends of the blade to bring it to its final shape (Figure 1). You'll notice in the drawing at right that I left a slight flat on each end of the blade to avoid having sharp points.

**ETCHING.** At this point in the game, you have a decision to make. If you'd like to add the decorative scrollwork etching to both sides of your blade, check out the box on the opposite page to see how that's done. After the etching work is complete, use a piece of 600-grit sandpaper attached to a flat surface to sand a consistent scratch pattern along the length of both sides of the brass blade.

**ASSEMBLY.** To affix the blade to the handle, you'll use two-piece brass rivets. (Check page 98 for source information.)

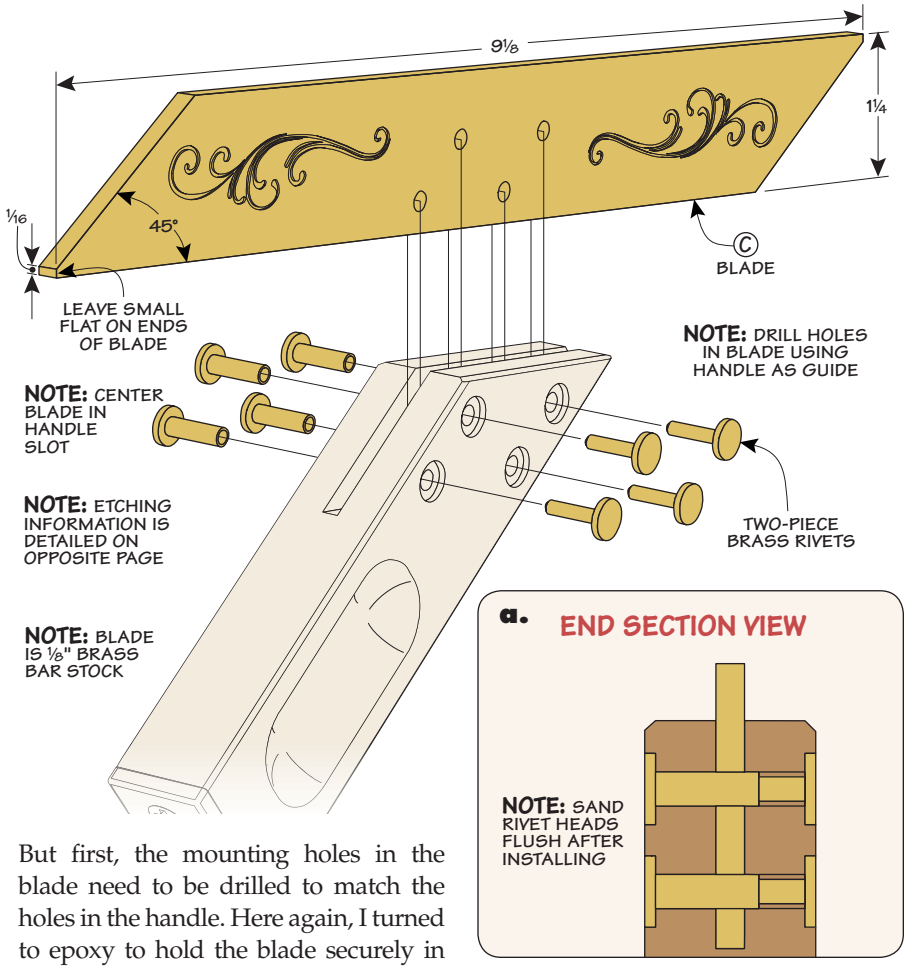


But first, the mounting holes in the blade need to be drilled to match the holes in the handle. Here again, I turned to epoxy to hold the blade securely in the handle while I drilled the holes, as shown in Figure 2, below.

**RIVET TIME.** Attaching the blade to the handle with the rivets is pretty straightforward. Simply push the two halves together and then tap them home using the anvil on the end of a machinist's vise (Figure 3). Finally, sand the rivet heads flush using the same method you used to sand the handle and blade earlier.

## **How-To:** Make the Blade & Assemble

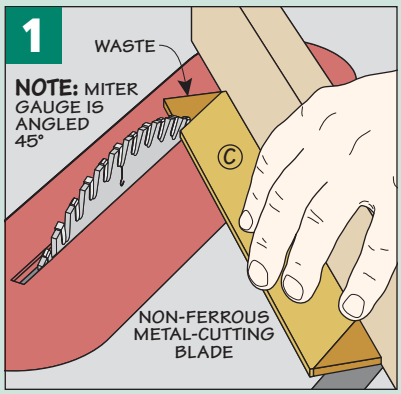


**Miter Blade.** Use a non-ferrous metal-cutting blade to miter the ends of the brass blade. Leave a flat on each end.

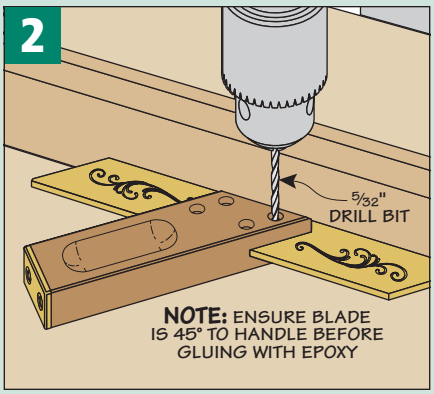


**Drill Holes for Rivets.** A little epoxy secures the blade to the handle while drilling the mating holes in the brass.

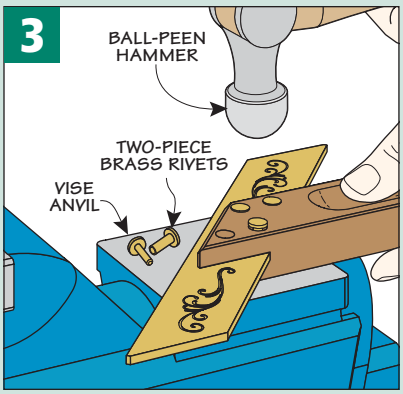


**Add the Rivets.** Gently drive the two-piece rivets together on a solid, flat surface. A vise anvil works well for this.

# **How-To:** Etch the Decorative Scroll

**Transfer Pattern.** Copy the negative of the blade pattern at right onto a piece of toner transfer paper. Cut it out, and use an iron to adhere the paper to the brass blade.

**Remove Pattern Backing.** Carefully set the hot blade in a bowl of water to cool and let it soak for a few minutes (Photo 2). Then peel the backing away from the brass (Photo 3).

**Pitting Prevention.** To further seal the black toner and to prevent the etching solution from pitting the brass, cut out an oversized strip of GreenTRF Foil and place it on the blade.

**Add the Foil.** Use an iron to adhere the green foil to the blade (Photo 5). A sheet of paper prevents melting the foil. After cooling in a bowl of water, the excess foil peels away (Photo 6).

**Chemical Reaction.** Wearing rubber gloves, load a small sponge with ferric chloride and rub back and forth over the scroll designs. Keep the sponge moving for 4 to 5 minutes.

**Clean Up.** Next, spray the blade with Windex (Photo 8). The ammonia will neutralize the acid. Finally, wipe the blade with acetone to remove the green foil and toner (Photo 9).

**PATTERN**
Full-Size
(100%)

**NOTE:** Set printer or copy machine color output settings to "NEGATIVE"

# shop-made Marking Knife

This must-have layout instrument combines old-world design with modern construction techniques. You're rewarded with an heirloom-quality tool.

Accurate layout is the key to a successful project. And using a quality marking knife is a much more accurate way to mark a line than with a pencil. This is especially so when laying out joints that require near-perfect precision, such as dovetails and tenons. The knife scores an extremely fine line, so unlike a thick pencil line, you know exactly where you need to cut.

I like the Japanese-style marking knife similar to the one you see pictured above. The blades have right or left beveled edges and steep angles, giving them a really sharp point — perfect for accuracy. However, one drawback is that they don't come with handles, so they're awkward to hold onto. To solve this problem, I made handles to give me better control when I use them.

If you take a look at the drawing below, you can see how the handle goes together. The blade is sandwiched between two wood blanks. The copper rings, or ferrules, on the ends not only help hold it together, but give the project the look of a traditional Japanese woodworking tool.

**SET SCREW.** One nice feature is the set screw that holds the blade in the handle. It grips the blade firmly, yet allows you to easily change blades or remove the blade for sharpening. In addition, you can flip the blade around and slide the beveled end of the blade into the handle when you're not using the knife.

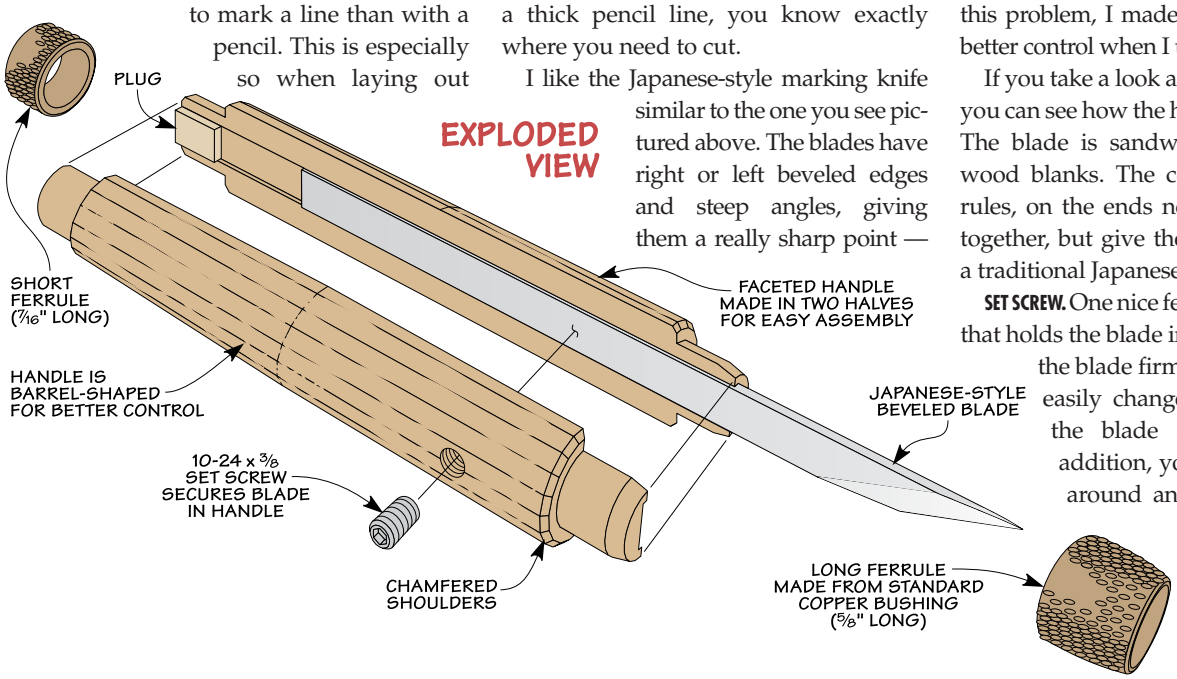

**GETTING STARTED.** It may seem strange to start off with square blanks when the handle is going to end up round — but that's exactly how this project begins. You'll start with two rectangular blanks — one for each half of the handle, as you can see illustrated in Figure 1.

After cutting the blanks to size, you're ready to rout a groove into each half to create a pocket for the blade (Figure 1a). When the grooves are done, hold the pieces together and slide the blade into the slot for a test fit. You want it to fit snugly, but not so tightly that you have to force the blade into the slot.

Once you're satisfied with the fit, now is a good time to drill and tap a hole for the set screw in one of the rectangular blanks, as shown in Figure 1b. After the screw hole is drilled, you can glue the halves of the handle together, taking care not to get any glue in the groove.

**ROUND THE EDGES.** When the glue dried, I took the handle over to my router table and rounded the edges to create a circular body. The box at the bottom of the page shows how I performed this operation. After that, I cut the square ends off the blank, as you can see in Figure 2, and plugged the hole in one end of the blank (End View).

That's really all there is to shaping the handle. On the next page, a few finishing touches are added to dress it up and make it easier to hold.

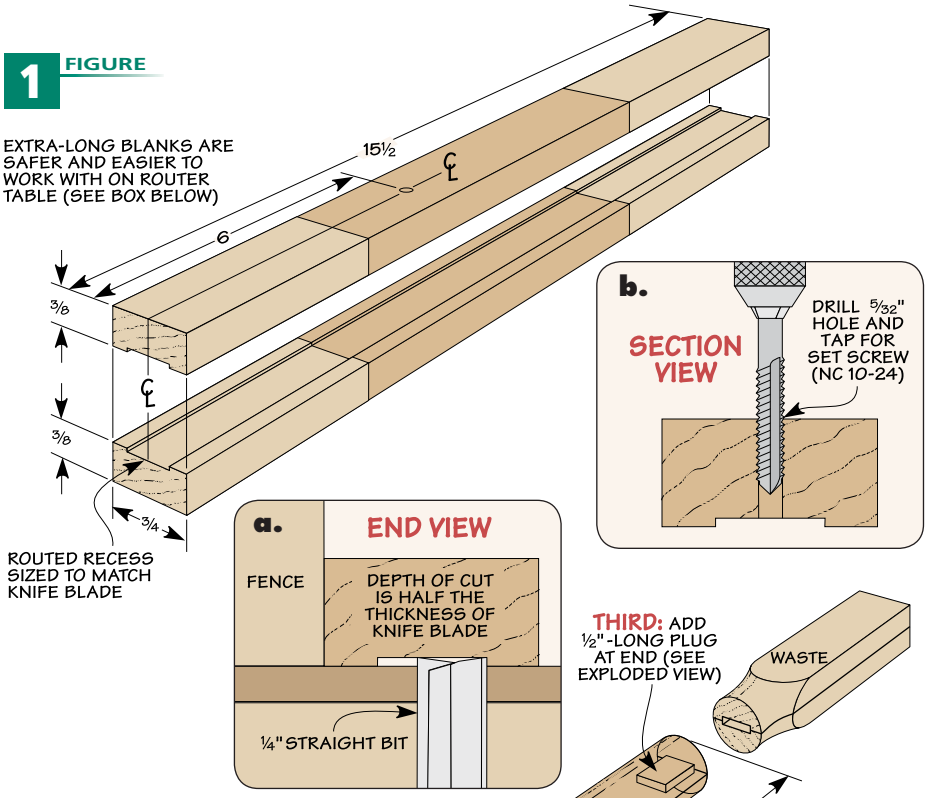


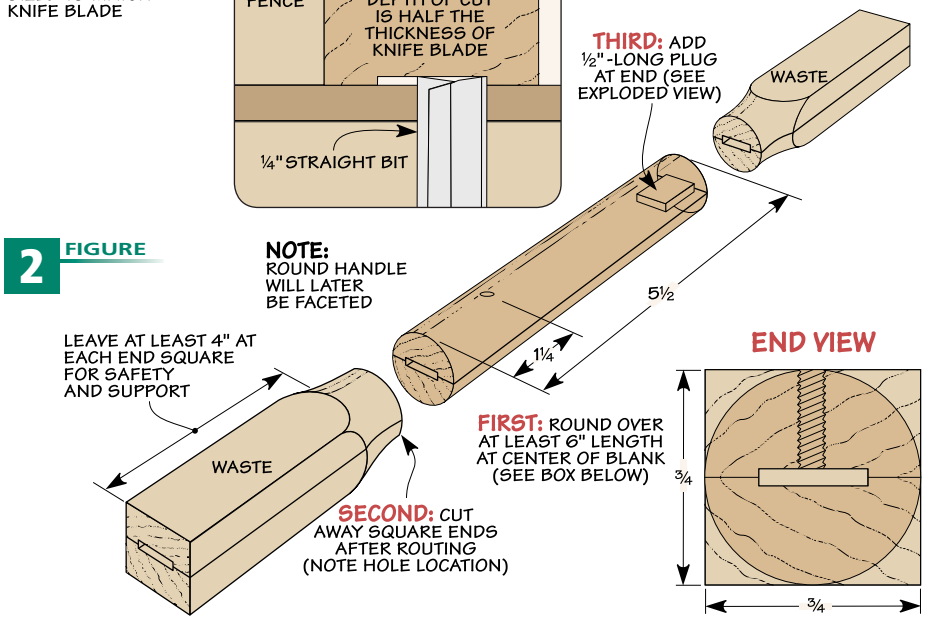


# Make it Round

Sharp corners and square edges don't make a comfortable knife handle. But turning the square blank into a smooth, round handle isn't difficult at all.

As you can see in the drawing on the right, the rounded handle is formed in the middle of the long rectangular blank. By doing it this way, the square ends make the blank easier and safer to work with.

First, I also marked my starting and ending points on the blank. Then, set up a ⅜"-radius roundover bit and the router fence according to the inset drawing on the right. To rout the blank, slowly pivot the blank into the bit at the first mark and slide it to the second mark. Repeat this three more times, rotating the blank each time. Once the sharp corners are gone, you simply cut off the square ends to complete the handle.

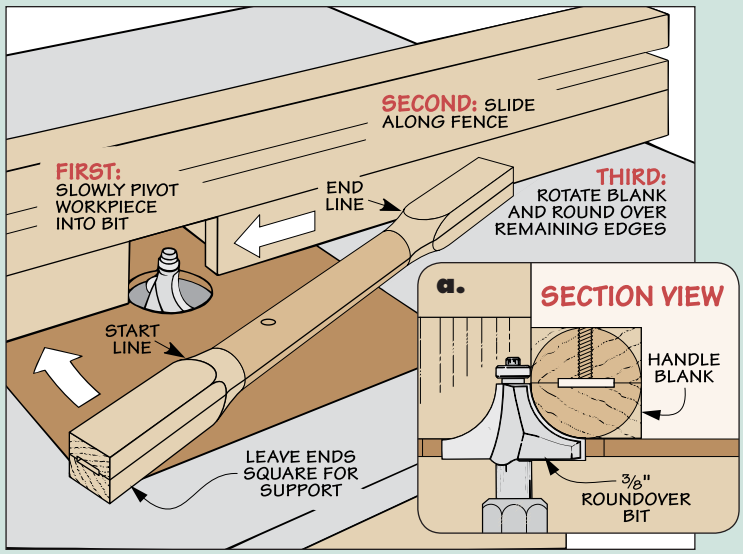

# crafting the **Ferrules**

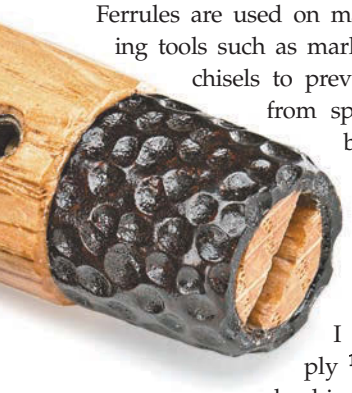

**Dark Finish.** Burning tung oil onto the copper ferrules results in this black finish.

Ferrules are used on many woodworking tools such as marking knives and chisels to prevent the handles from splitting near the blade. But there's no denying that they can add a nice look as well (left photo).

The ferrules I used were simply ½" x ⅜" copper bushings that you can pick up at any hardware store (inset photo at right). But rather than have just plain copper fittings on the ends of my marking knife, I decided to "dimple" and then burn the ferrules with a finishing oil to match the look of traditional Japanese woodworking tools.

To start off, I cut the rear ferrule (Step 1). To do this, put the ferrule over a wood dowel and cut it to size with a hacksaw.

**DIMPLES.** Next comes the dimpling process. For just the right look, I wanted a relatively large dimple that wasn't perfectly round. A 5/16" x 2" carriage bolt with its tip rounded over provided the effect I was looking for.

As you can see in Step 2, I slid the ferrules over a steel rod to prevent them from becoming out-of-round while I was hammering the dimples in. You have to hit the bolt pretty hard to leave a dimple, so don't be shy. For a handcrafted look, punch the dimples randomly.

**FIERY FINISH.** To complete the ferrules, I brushed on an oil finish (Step 3) and then applied heat (Step 4). Different oils produce quite different looks, as you can see in the box at lower left.

While the ferrules cool down, you can start making the tenons for the ferrules on the handle. This is shown in the box at the bottom of the next page.

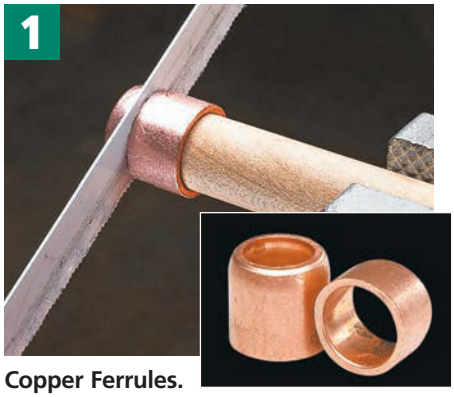


**Copper Ferrules.** To cut the end ferrule to its final size, slide it onto a wood dowel to securely hold it and trim it with a hacksaw.

## Recipes for Color Options

If the black finish pictured above is not to your liking, you can experiment with other finishing oils to find something you do like. In addition to the peanut oil finish, I used two other finishing oils (listed below), as well as no oil at all — I just scorched the plain copper bushing. And the longer you apply the heat, the darker and richer the final result becomes.

**No Oil.** Heating the ferrules with no oil on them simply gives the copper an antique look.

**Boiled Linseed Oil.** Firing this oil produces a medium-brown hue on the copper ferrule.

**Peanut Oil.** Heating peanut oil gives the ferrules a golden-red appearance.

**Dimples.** Randomly tap the bolt to add "dimples" to the ferrules. I had to file the end of the steel rod a little to get the bushing on.

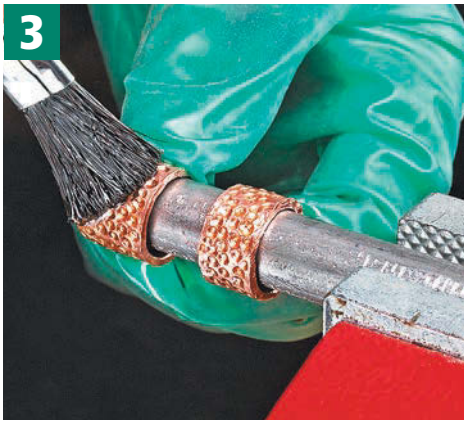


**Brushing on Oil.** Applying an oil to the ferrules is one step to get the look of traditional Japanese woodworking tools.

**Fire It Up.** Scorching the ferrules with a torch will discolor the finish and provide a beautiful hand-crafted finish.

# planing the **Facets**

A perfectly round knife handle didn't feel quite right, so I added facets and a barrel shape to the handle. This gives you a better grip, plus the knife isn't as likely to roll off your workbench. And, best of all, because these facets are randomly planed into the handle, you can't really mess them up.

The photo on the right shows how the facets are made. First, draw a line around the center of the handle — this will be your reference point for both directions. Then, using a block plane, work from the centerline and shave the handle. Start with light pressure and increase it as you near the end. You're looking for a tapered effect. After a couple of strokes, roll the handle and shave some more off. When you've finished one end, flip the handle over and taper the opposite end of the handle. Be sure, however, not to cut into the tenons on the ends of the handle.

Once that's done, take a chisel and create a chamfered shoulder around the tenons. And finally, install the ferrules on the tenons and spray the handle with several coats of lacquer.

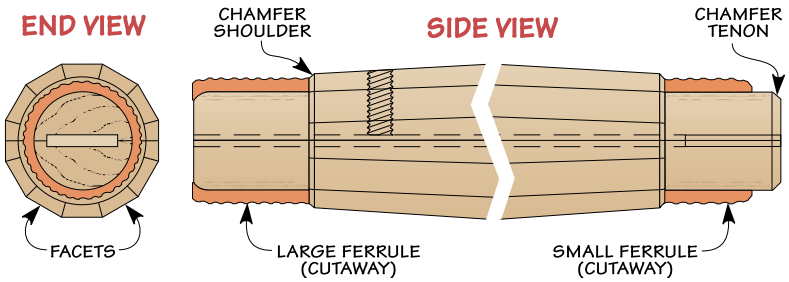

**The Final Touch.** Starting from the center, taper the handle toward both ends using a block plane to create a faceted, barrel shape.

# **Shop Tip:** Routing Round Tenons

Cutting round tenons is easy on a router table, especially with the simple jig illustrated here. To make the jig, all you need is a scrap of 2x4 and a piece of 1/8" hardboard. Start by ripping a 6"-long piece of 2x4 down to 1 3/4" wide. Turn it on edge, and then drill a 3/4" hole near one end of the block, centered on its width. After the hole is drilled, glue the hardboard onto the block as a base.

Next, install a 3/8" straight bit in the router table. Place the block against the router table fence and adjust the fence so that the straight bit is centered on the end of the block.

Then raise the bit to 1/8" above the table and push the block from right to left until the bit cuts about halfway into the side of the 3/4" hole. Repeat this process, raising your router bit 1/8" each time, until the height of the groove equals the length of the tenon you want, plus the 1/8" hardboard.

When the jig is ready, clamp it onto the fence. Leave enough of the bit showing in the hole to make a tenon the size to fit for the ferrules.

Turn the router on and slowly insert the knife handle into the hole until it comes to rest on the hardboard. Rotate the handle to complete the tenon. The bit not only will cut the tenon, but will leave a clean shoulder as well.

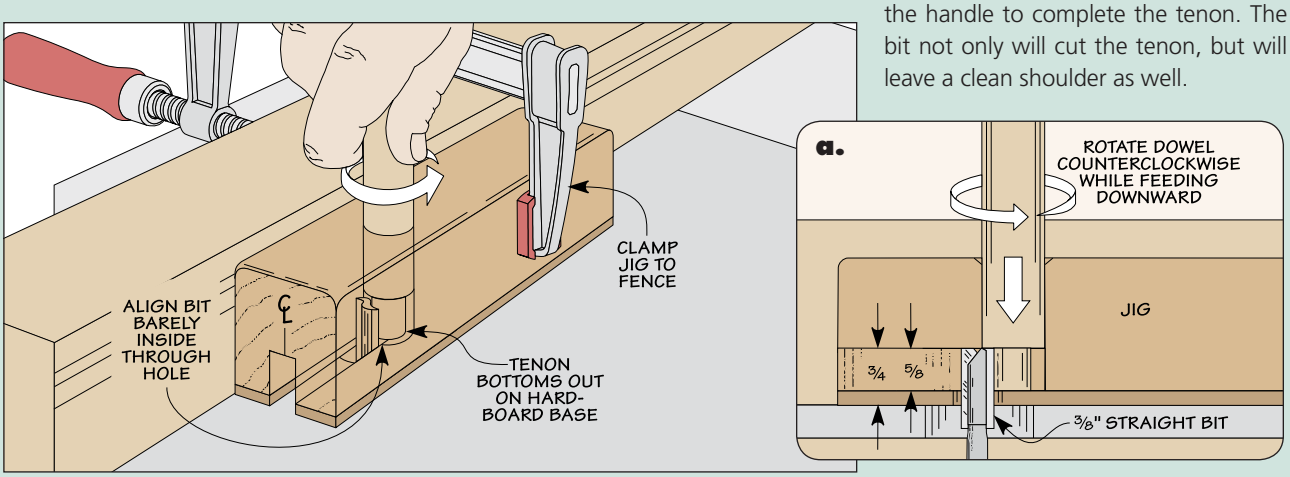

# multipurpose Layout Tool

With just a few hours in the shop, you can transform a piece of T-track into a handy tool that serves many different layout functions.

When one of our project designers first showed me the layout tool that you see in the photos here, I had a difficult time coming up with a name for it. It started out as a panel gauge that's handy for scribing parallel lines across a wide panel, as shown in the upper right photo on the next page. But as you can see on these two pages, it's capable of so much more.

The useful tool all starts with a length of T-track, which is readily available from a number of woodworking suppliers. Then you add shop-made accessories to turn the T-track into a practical shop tool.

The marking head is designed to hold a carpenter's pencil or a hobby knife blade. The trammel head allows you to lay out circles and arcs (lower right photo, opposite page). And with a few simple marking guides, the tool becomes a story stick, as shown above.

This simple concept undoubtedly fits the definition of a "weekend shop project." With some basic hardware, scrap wood, and just a few hours of shop time, you'll have a project that you'll be glad to put to use in your shop. I've provided a few ideas, but I'm sure you can come up with with even more uses for the tool.

# multiple **Options**

Everyone runs across some head-scratching situations in their shop, where a particular layout, circle, or other marking task presents a challenge. The idea with this project was to solve a number of these problems with one simple tool.

**STORY STICK.** A "story stick" is an old woodworker's trick that solves a lot of these problems. It's often just two sticks that are clamped together to "save" a measurement (such as the inside of a drawer opening) in order to transfer the dimension to another part of the project. Though the story stick shown in the main photo on the opposite page is a little more advanced, it's just as useful.

**PANEL GAUGE.** Many projects require parallel lines marked across panels. These can be used for everything from laying out dadoes to locating shelf pin holes. And a panel gauge makes quick work of these tasks, with a fence that runs along the edge while a marking head scribes the line with either a carpenter's pencil (upper right photo) or a hobby knife blade (inset photo).

**Mark Your Way.** The marking head readily accepts either a pencil (right) or knife blade (below).

**BEAM COMPASS.** Another tricky task that comes up frequently is marking a large arc or circle. With the addition of a trammel, this layout tool converts easily into a beam compass for handling these jobs, as well (below). Once again, the marking block holds the pencil securely as you lay it out.

**Hardware.** Readily available hardware forms the foundation of this layout tool.

## MATERIALS & SUPPLIES

| | | |
|---|---|---|
| **A** | Nut Plate (1) | 5/8 x 3/8 - 2 |
| **B** | Clamp (1) | 5/8 x 5/8 - 2 |
| **C** | Marking Head (1) | 5/8 x 1 - 2 |
| **D** | Trammel Head Top (1) | 5/8 x 1 - 2 |
| **E** | Trammel Head Bottom (1) | 3/8 x 1 - 2 |
| **F** | Pivot Base (1) | 3"-dia. x 1/4 Hdbd. |
| **G** | Trammel Pin (1) | 1/4"-dia. x 1/2 |
| **H** | Marker (4) | 5/8 x 1 - 1 1/2 |
| **I** | Fence Body (1) | 5/8 x 1 1/2 - 9 |
| **J** | Fence Guide (1) | 1/2 x 3/4 - 9 |

- (1) 1/4"-20 T-Track
- (3) 1 1/4"-dia. Knobs with 1/4"-20 Stud cut to 1/2" long
- (4) 1"-dia. Knobs with 1/4"-20 Insert
- (4) 1/4"-20 x 3/4" Threaded Rod
- (7) 1/4"-20 T-Track Nuts
- (2) #6 x 1" Machine Screws
- (2) #6 Hex Nuts

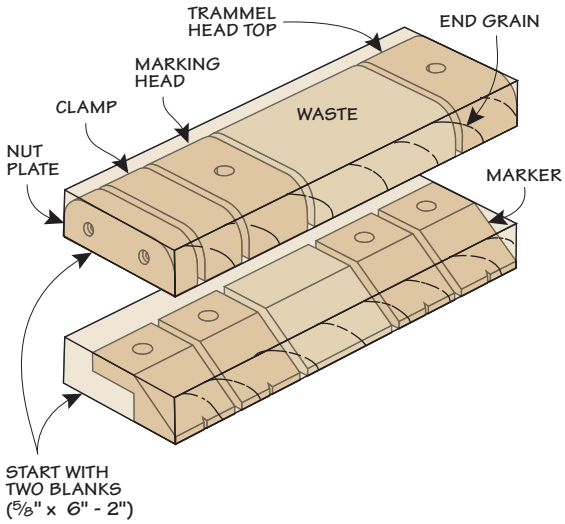


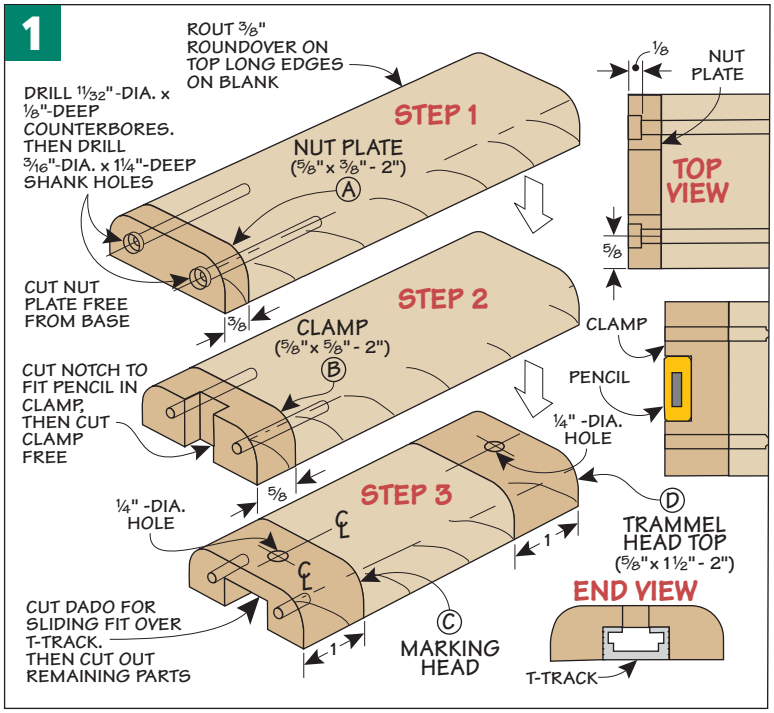


# build the **Tool**

Making all of the parts for the layout tool means working with small pieces. To make this task easier and safer, I started with short, wide blanks, as shown in the left drawing above. (I used cherry.) You'll form the basic profiles on the blanks and then cut them to width later.

**END GRAIN.** There's one other thing I need to point out. All of these smaller parts are made with the grain running in the longest dimension. This means you'll cut the blanks from the end of a workpiece that has been planed to thickness. Orienting the grain in this direction helps prevent splitting when tightening the knobs against the T-track.

**MARKING HEAD ASSEMBLY.** I started by making the assembly that holds a pencil or knife blade. Figures 1 and 2 show the three-step process of making each part and how they go together. The marking head is used to clamp the assembly to the T-track. A nut plate captures a pair of hex nuts for screws that clamp the pencil in place. The clamp can be rotated 180° to secure a readily available and inexpensive blade for a hobby knife.

I routed a 3/8" roundover on the top long edges of the blank (Figure 1, Step 1). Then you can lay out and drill the counterbores and holes for the screws that will secure the clamp to the marking head. The counterbores are sized so the nuts can be pressed into place to prevent them from rotating. After cutting the nut plate free, press the nuts into place with a small bar clamp.

Use the remainder of the blank to make the clamp and marking head. To form a notch in the clamp to hold a pencil, as shown in Step 2, I stood the blank on end and nibbled

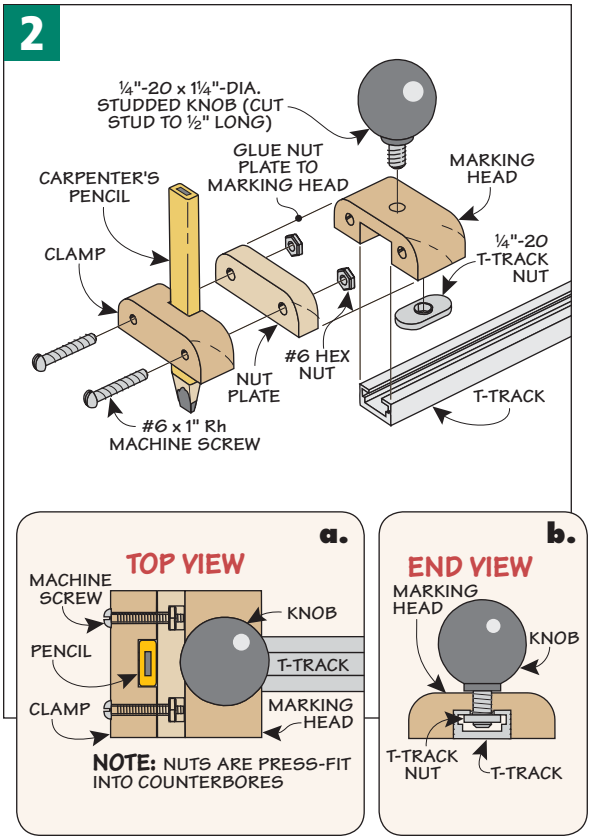


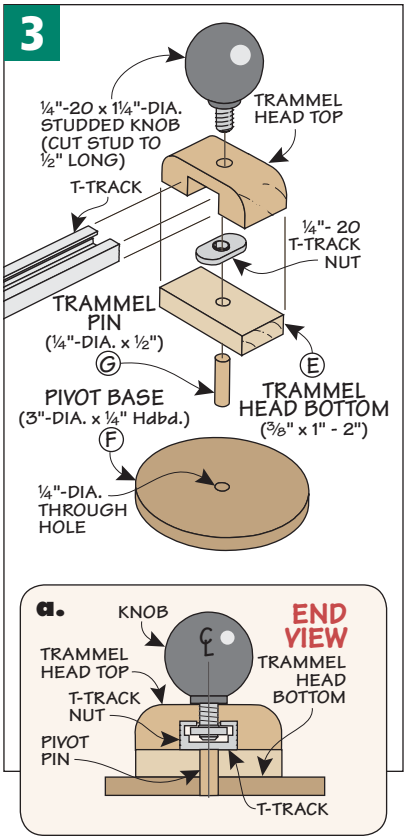

away the waste at the table saw. The depth of the notch should be just slightly less than the thickness of the carpenter's pencil, so that it can be clamped tightly.

After cutting the clamp free from the blank, the next step is to cut a dado along the bottom of the blank (Step 3). The goal is a sliding fit over the T-track.

Cut the marking head from the blank so you can attach the nut plate and clamp. I glued the nut plate to the marking head with the nuts facing inward, as illustrated in Figure 2. You can complete the marking head assembly by installing the pencil, clamp, screws, knob, and T-track nut.

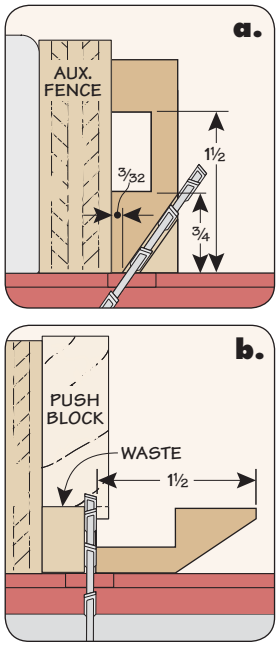


**4** FIGURE

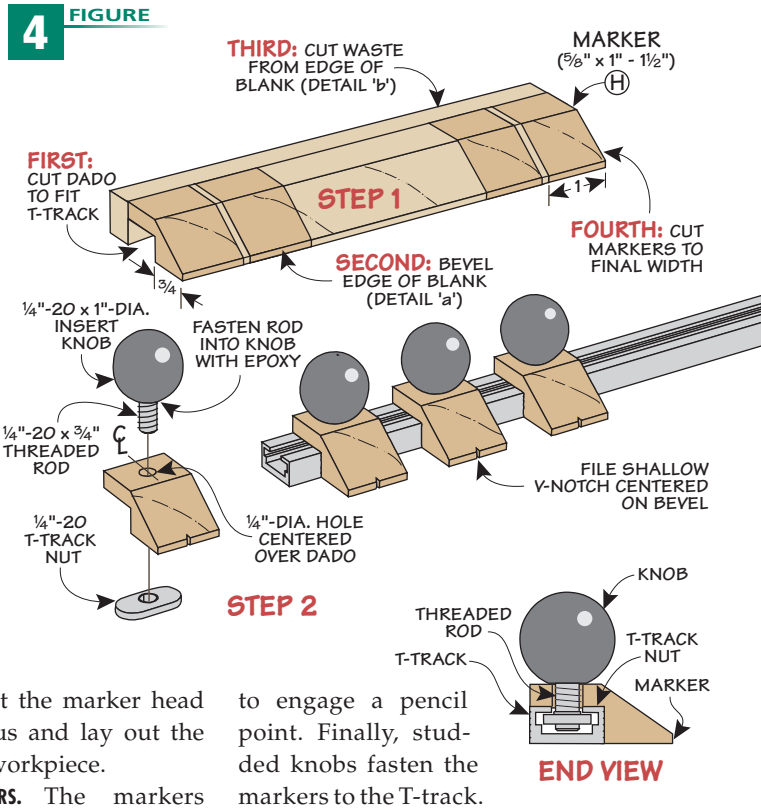


**TRAMMEL HEAD.** Figure 3 shows you how the trammel head is put together. The trammel head top is cut from the end of the same blank you used to make the marking head. Cut and glue the trammel head bottom to the top. After gluing the trammel pin into the bottom, you're ready to install the trammel head.

The hardboard pivot base is simply a circle with a ¼"-dia. hole drilled through the center for the trammel pin. To use the trammel function, align the hole in the round base over the centerpoint on the workpiece. You can temporarily fasten the base with double-sided tape, then insert the trammel pin. Adjust the marker head to the desired radius and lay out the circle or arc on the workpiece.

**STORY STICK MARKERS.** The markers shown in Figure 4 are cut from one blank. You'll cut a dado to fit over the T-track as before. And one edge of the blank is beveled. Figures 4a and 4b show how to complete the shape of the blank before you cut each of the markers to final width. Then you can drill the mounting holes.

I filed a small, triangular notch centered on the beveled edge of each marker. This serves as the registration point and also makes it easy to engage a pencil point. Finally, studded knobs fasten the markers to the T-track. I made my own studded knobs by gluing short lengths of threaded rod into the knobs with epoxy.

**PANEL GAUGE FENCE.** The last component to build is the long fence. Figure 5 shows how it's a two-part assembly. I waited until after assembly to do all the shaping at the band saw.

You can start by cutting the body and guide to overall size. Step over to the table saw to cut a dado centered on the bottom face of the body to fit over the T-track. Then drill the hole for the knob.

Glue the fence guide to the body, keeping the edge and ends of the guide flush with the back edge and ends of the body. Now you can lay out the tapered shapes. You'll notice that the fence is tapered in width at each end, as well as tapered in thickness. The shaping is easily done at the band saw, followed by a little hand sanding to round over the sharp edges.

**FINISHING.** Applying a finish to all the parts was easy — I wiped on a couple coats of varnish. A spray-applied lacquer would also be appropriate for these small parts.

Putting the layout tool to use is your next task. That shouldn't be hard to do. I'm sure this is one of those tools you'll be glad to have in your arsenal.

**5** FIGURE

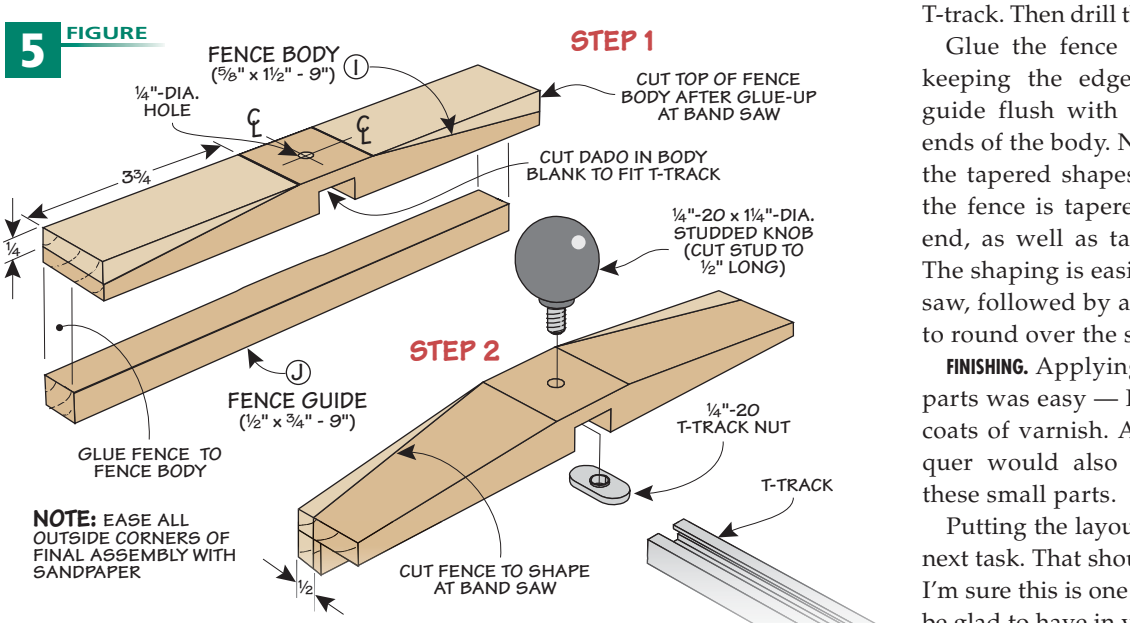

# heirloom Calipers & Dividers Set

With some simple tools and a little time, you can build a complete set of quality layout tools.

As I was strolling through the shop, I noticed one of our designers, Chris Fitch, busily filing and drilling some steel. It's not unusual to find Chris tinkering and what he came up with this time was a set of layout tools. They got a lot of attention and I knew I had to build a set.

The main reason they're so popular is that they're so easy to make. All it takes is some basic tools you probably already have: a hacksaw, a few files, and a drill press. Cutting, filing, and drilling the steel blanks isn't a big deal. And some final polishing with sandpaper gives them a nice, satin finish.

But there's more going on here. And that's how to connect the two legs so they hold their set position for measuring and layout. Some traditional tools use a threaded rod with a knurled nut for adjustment. Others use a simple wingnut to tighten the legs of the tool.

Instead, Chris used a simple, but effective technique: a friction joint. A pair of disc springs and a simple brass rivet apply just the right amount of pressure to keep the legs from slipping. It works beautifully. Read on to find out how to make your own set of layout tools.

GO 2 Online Extras

To download 3-D models of the layout tools, go to: WoodsmithSpecials.com

## MATERIALS & SUPPLIES

| | | |
|---|---|---|
| **A** | Divider Legs (2) | 5/32 x 3/4 - 8 1/4 |
| **B** | Long Compass Leg (1) | 5/32 x 3/4 - 8 1/4 |
| **C** | Short Compass Leg (1) | 5/32 x 1 7/8 - 6 1/4 |
| **D** | Inside Caliper Legs (2) | 5/32 x 3/4 - 8 1/2 |
| **E** | Outside Caliper Legs (2) | 5/32 x 3/4 - 8 3/4 |

Required for Each Tool:

- (1) 5/32" x 2" - 18" rgh. Grade 1018 Steel
- (1) 1/4" I.D. x 5/8" O.D. Brass Washer*
- (1) 1/4"-dia. x 3/4" Brass Fh Rivet
- (2) .265" I.D. x .687" O.D. x .052"-thick Disc Springs
- (1) 8-32 x 1/4" Thumb Screw

* Washer cut from .020"-thick brass sheet

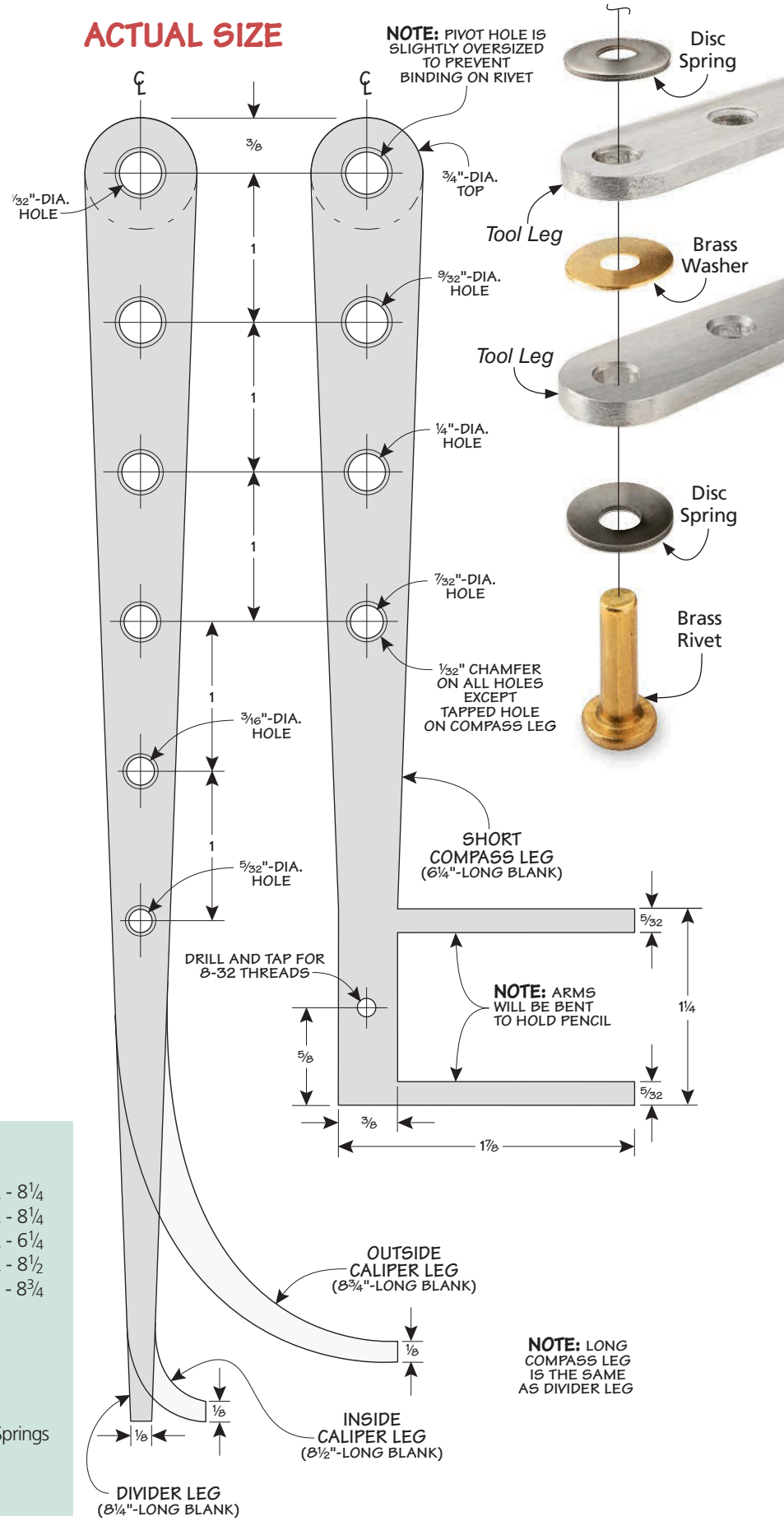

# making a basic **Leg**

The set of layout tools consists of an inside calipers, an outside calipers, a compass, and a set of dividers. Since the legs of the dividers are the easiest to make, it's a great way to learn the basic techniques that apply to each of the tools. I'll point out any differences as I go along, but each one starts with a mild steel blank.

**A LITTLE ABOUT STEEL.** When purchasing the steel (Grade 1018) to use for the layout tools, I chose precision-ground stock that was 2" wide and 5/32" thick. This thickness just "feels right" — not too heavy and clunky, yet not too flimsy. The precision-ground stock is just a few dollars more than raw stock, but it means less filing and sanding to get a smooth surface. And I'm willing to pay a little more to eliminate all that extra work. You can find out where to buy the steel and all the other supplies I used in Sources on page 98.

**FIGURE 1**

**DIVIDERS**

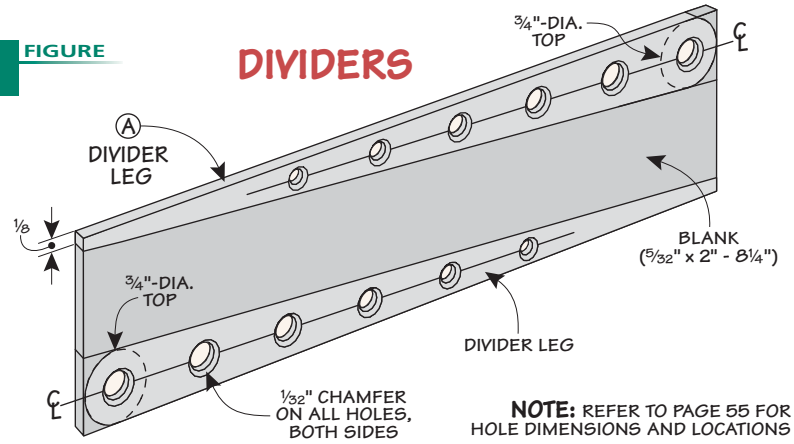


**LAYOUT.** The key to working with metal is an accurate layout. To accomplish this goal, I used blue layout dye to color one face of the steel blank (upper photos at left). The dye provides a nice contrast for the layout lines you scratch in with a sharp scribe. This leaves you with clean, crisp lines to work to when drilling and shaping.

**CENTERLINE REFERENCE.** The first mark I made on the blank was the width of each leg at the bottom measured from each factory edge, as shown in Figure 1. This way, you'll only need to cut and shape one side of each leg.

The next important measurement is the centerpoint of the pivot hole at the top of each leg. With this located, you can draw a centerline for the leg and the top radius. Then lay out the centers of all the holes and draw the other side of the leg. I used a center punch to mark the hole centers (left margin photo).

**DRILL & COUNTERSINK.** It's time to head to the drill press to drill all the holes and create a decorative chamfer (lower left photos). The chamfered holes give the tools a high-tech, modern look.

There are a couple of things worth mentioning here. For safety, make sure the workpiece is against a fence clamped to the drill press table. Another tip is to have a small bottle of light oil handy. (I like to use 3-in-1 oil.) This helps lubricate the drill bit as you're drilling and minimizes heat buildup. Other than that, it's a simple matter of drilling a hole in each leg then switching bits for each size hole.

After all the holes are drilled, I switched out the drill bit for a small countersink, as shown in the left margin. It not only creates an eye-catching chamfer on all the holes, but removes any burrs on the pivot hole that might interfere with smooth operation. The goal is to make all the chamfers a consistent width. Just remember to chamfer the holes on both sides of the blank before moving on.

**A HACKSAW WORKOUT.** I'm not going to kid you — cutting the legs free from the blank will take a little muscle. But it goes fairly quickly. Before you clamp the blank in your machinist's vise, it's a good idea to line the jaws. This protects the workpiece from

**Layout is Key.** Use layout dye then scribe accurate lines. Mark all hole centers with a center punch before drilling (inset).

**Drilling.** A few drops of oil will keep the bit cool. Follow up with a slight chamfer using a countersink (inset).

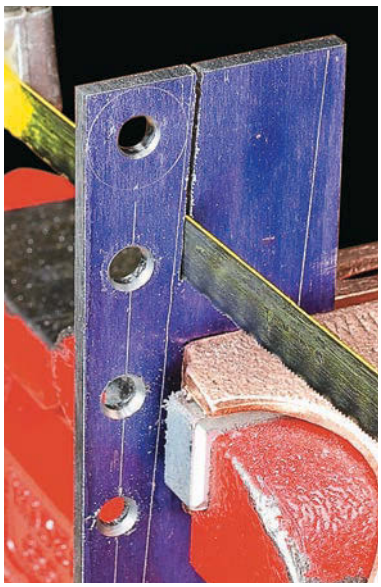

**Cutting to Shape.** Use a hacksaw blade to cut the legs free. Jaw liners protect the workpiece from marks.

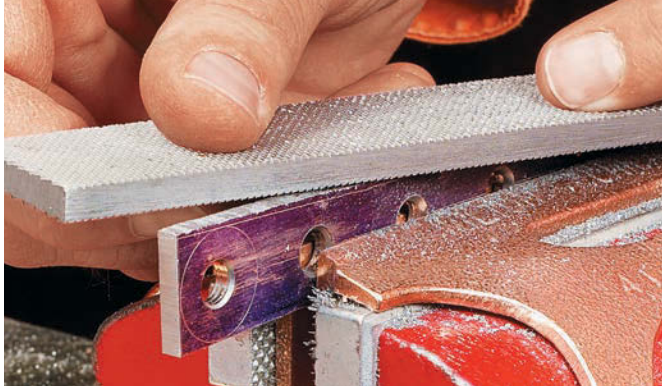

**Filing to Shape.** The layout lines serve as a reference when filing the legs to shape. Use the full length of the file to create a straight, smooth edge along the length of the leg.

**Satin Finish.** For a smooth, satin finish, use 220-grit sandpaper attached to a flat surface. A rivet works well as a "handle" to aid in gripping the workpiece as you slide it back and forth.

the dimpled pattern on the jaw faces. You can use commercial liners, like you see in the photo at above. Or you could use aluminum or brass sheets and cut them to wrap around the jaws.

**FILE UNTIL SMOOTH.** After the legs are cut free from the blank, there's a little more effort required for final shaping. Use a coarse file to start with and work to the layout line (upper left photo). And while you're at it, you can file the sharp point on each leg, as shown in the photo below. You can finish up the edges with a smooth file.

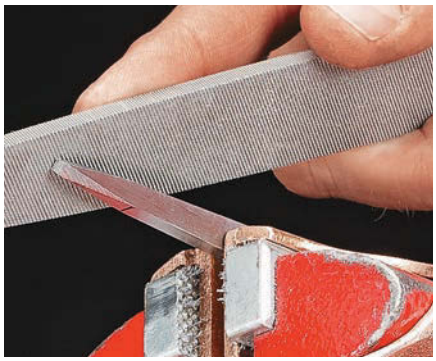

**Filing Points.** Start with a coarse file to shape the points of the dividers. Follow up with a smooth file and sandpaper.

**Shop-Made Washer.** A hole saw creates a perfectly sized brass washer. Sand both sides and all edges to remove burrs.

For final polishing, I used adhesive-backed 220-grit sandpaper fastened to a piece of MDF. Take some time to sand all the straight edges and the rounded end. A brass rivet makes a nice "handle" for smoothing each face, as you can see in the upper right photo.

**BRASS WASHER.** To keep the legs of the dividers from rubbing against each other during use, I separated them with a thin, brass washer. A 5/8"-dia. hole saw is the perfect size to cut the washer from a brass sheet (left photo below).

**Mushroomed Rivet.** Light, angled taps are all it takes to peen the rivet. Check frequently for the right amount of friction.

**Practical.** Dividers are a staple in any shop for stepping off even spacing and layout work.

**ASSEMBLY.** You're almost ready to assemble the dividers. When assembling the disc springs, brass washer, and two legs (Figure 2), you'll want the rivet to extend about 1/8" beyond. This gives you just enough material to peen over the end of the rivet. The problem is the brass rivet I used was a little long. So I ground about 1/8" off the length before moving on.

The only trick to assembling the dividers is the orientation of the cone-shaped disc springs. The smaller end of each cone should face away from the legs.

Now peen over the end of the rivet with light, angled taps all around (right photo below). Keep checking the amount of friction in the joint as you go. When the legs are snug, your work is done.

**2 FIGURE**

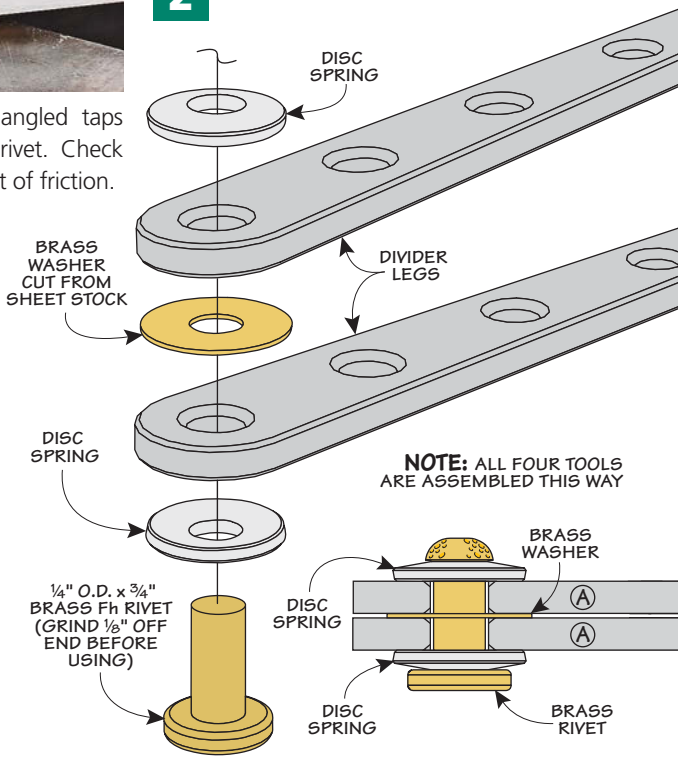

# building the Compass & Calipers

You need a compass, an inside calipers, and an outside calipers to complete the set of layout tools. As I mentioned earlier, the basic techniques for layout and assembly are the same as the dividers.

But there's a little more to shaping the legs of the calipers and compass. The calipers require some bending so that the points are curved. And one leg of the compass has to hold a pencil in order for it to do its job. This compass leg is a little more involved, so I'll explain it first.

**FIGURE 3**

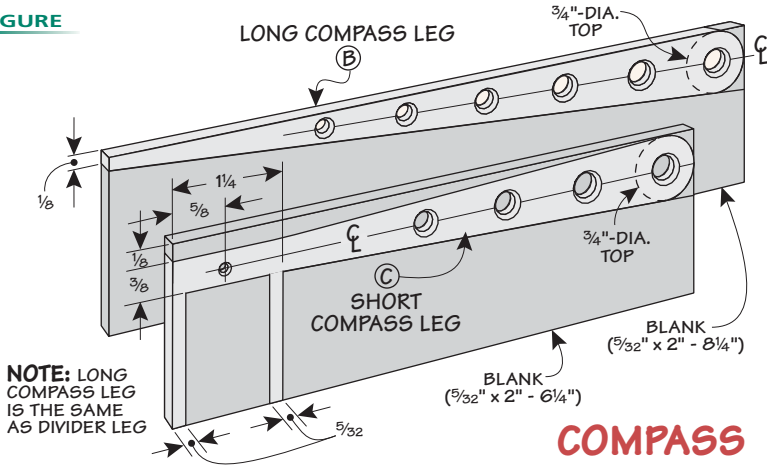


## COMPASS

The nice thing about building the compass is that one leg is the same as the legs on the dividers. The other leg is made to hold a pencil. Figure 3 above and the pattern on page 55 give you the details. The photos below show how to cut an "F" shape on the end with just a few cuts. The resulting "arms" are what you'll shape to hold a pencil.

**FORMING A PENCIL HOLDER.** The first thing to do is clamp the shaped piece in a vise as shown below. The idea is to bend over the arms at a sharp, 90° angle.

In the lower left photo below, you can see how a 5/16"-dia. bolt is clamped in the vise along the centerline of the workpiece. (This diameter is just right for fitting a pencil.) All it takes are a few mild taps to gently bend the arms around the bolt.

Now you can test the fit of a wood pencil and make any adjustments. The goal is to create a sliding fit. If the pencil slides through too easily, just tap the arms a little tighter, as you can see in the lower left margin photo.

The arms will be a little long, but that's okay. You can cut and file them to match the shape of the bend on the opposite side. The last thing to do before assembly is to tap the hole for the thumbscrew that holds the pencil in place. (Refer to the article found at *WoodsmithSpecials.com* for help on tapping.)

**COMPASS ASSEMBLY.** You can assemble the compass just like you did with the dividers. Just make sure that the pencil holder is on the outside of the leg during assembly.

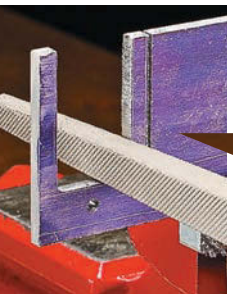

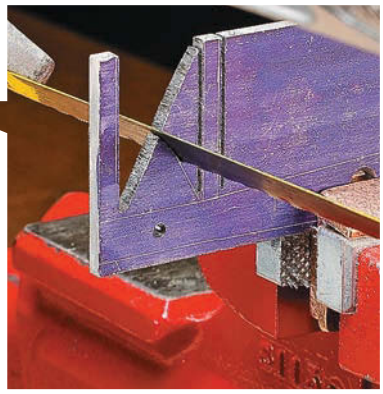

**Removing Waste.** Diagonal cuts will leave a small amount of material to be filed away (inset).

**90° Bends.** Give the arms a tight bend by clamping the leg in the vise and tapping them over.

GO 2 Online Extras

For complete plans for these design options, go to: WoodsmithSpecials.com

**Creating a Curl.** Use a bolt as a mandrel to form the arms that hold a wood pencil (inset).

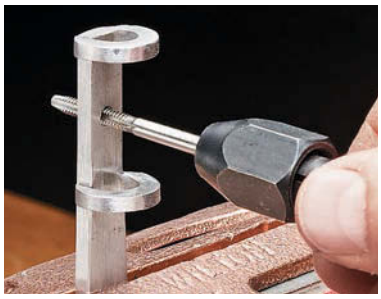

**Tap Threads.** A tapped hole houses the knurled thumbscrew that holds the pencil securely.

**Perfect Circles.** Creating a circle on a workpiece is easy with your shop-made compass.

**FIGURE 4**

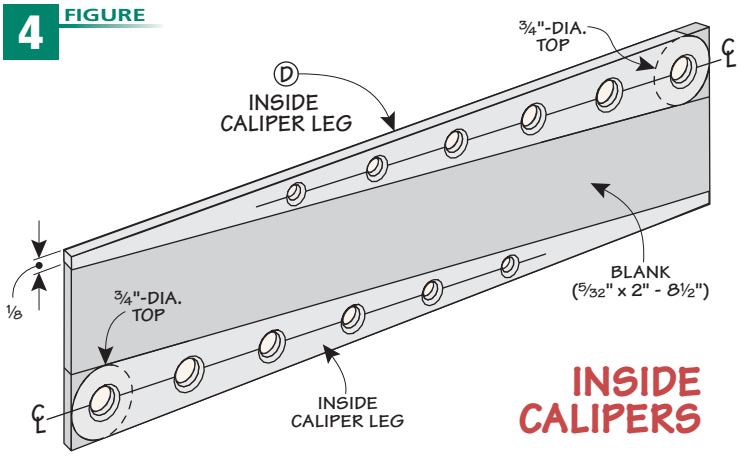

**Tight Radius.** A bolt comes to the rescue as an anvil for forming the small radius.

**Inside.** Take the guesswork out of measuring pipe and hole diameters.

## CALIPERS

Like the dividers, making the two sets of calipers begins with a pair of straight legs. The difference is the length of the steel blanks. The legs are a little longer to account for the bends at the bottom end.

**TIGHT RADIUS.** After drilling, cutting to shape, and smoothing, you can work on bending the ends. For the inside calipers, you'll form a tight radius (photo above).

Here again, a 5/16"-dia. bolt is the perfect size. The key is to securely clamp the bolt in the vise. Then lay the leg on edge across the bolt to start forming the radius.

I found that it really didn't take a lot of force to shape the leg. You'll start at the top of the radius and work your way out to the end of the leg. This provides the smoothest curve with the least amount of effort. You can use the pattern on page 55 to check your progress as you gently create the curve.

Once you're happy with the final shape, you may need to do some finish sanding to get rid of the small dents and dings from the hammer. From here, the assembly process is the same as before.

**LARGE RADIUS.** For making the outside calipers, I used a larger radius so that the points would "reach" around objects. Forming this radius was a little trickier for two reasons. First, it takes a little effort to make sure both legs are shaped the same. Here again, the pattern will help you out with this. The other thing to note is that it takes time to get a smooth curve. It doesn't pay to be in a hurry.

**PIPE MANDREL.** To help create a smooth, gradual curve, I used a 1½"-dia. steel pipe fitting. Clamped tightly in the vise, the pipe serves as an ideal form or anvil for creating the large radius.

The procedure is the same as before — start at the top of the curve and gently work your way to the end. Again, gentle, consistent taps are the key. You'll get a feel for the right amount of force in a short while. After final shaping, you can smooth out any dings and kinks with sandpaper.

**TWISTED POINTS.** Once the calipers are assembled, you'll need to "twist" each leg until the points align. I found the best way to do this was to clamp the last couple of inches in the vise then use pliers for leverage to gently twist the leg. (Be sure to protect the legs with padding to keep the pliers from marring the surface.) It won't take much effort and it pays to take it slow. Keep checking your progress until the points align.

**HEIRLOOM QUALITY.** Building and using this set of tools will give you a lot of satisfaction. The best part is, you'll have a set of tools that will last for generations.

**Large Radius.** A pipe fitting makes a perfect anvil for creating the larger radius.

**FIGURE 5**

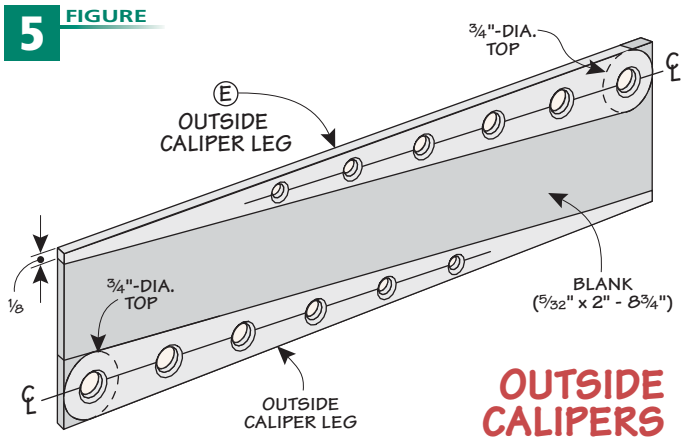

**Outside.** These calipers are handy to have near a lathe to check your progress on turnings.

# marking Gauge

For accurate layouts, most marking gauges just don't "cut" it. This maple and brass hand tool does that —and plenty more.

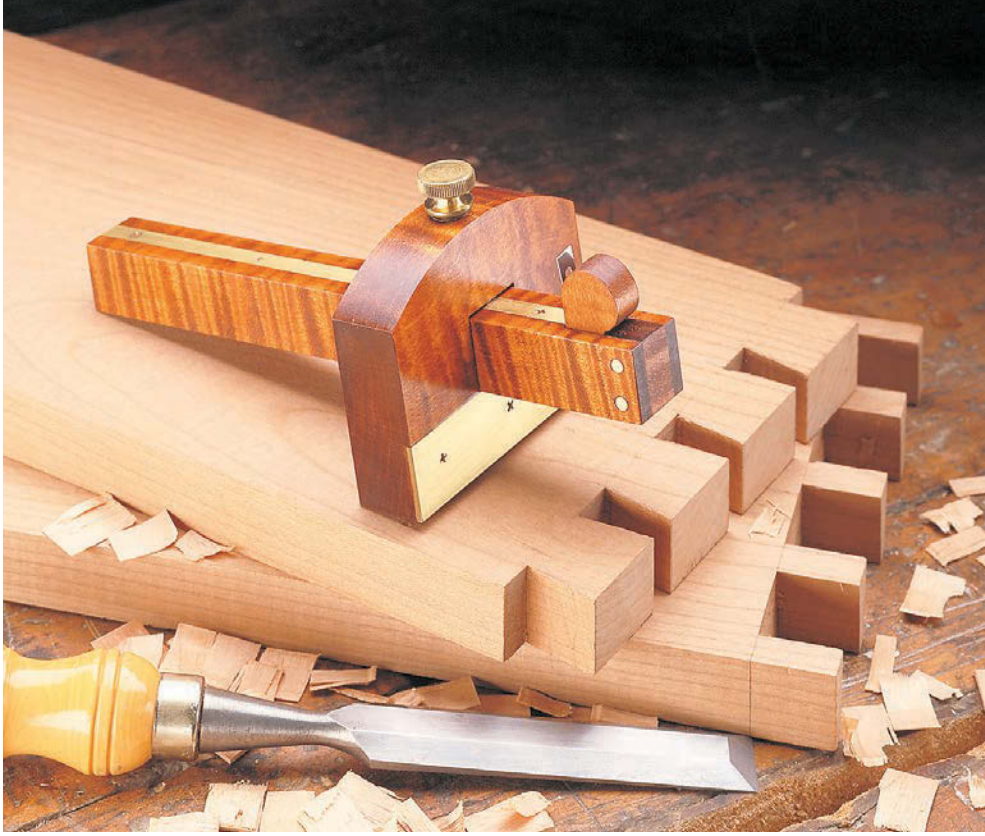

Call me old-fashioned, but I've always enjoyed the look and feel of a traditional, wood-bodied hand tool. Especially when it's dressed up with brass fittings.

In fact, that's one reason I decided to make the marking gauge shown in the photo at right. With a chunk of highly-figured maple that I'd "squirreled" away and a few pieces of brass hardware, I had all the makings for a great-looking hand tool.

**WORKING WITH BRASS.** Well, that sounds fine. But isn't it difficult to fit the brass pieces to the wood? Actually, it's considerably easier than it looks. For a few tips that will help produce a flawless fit, take a look at the box on the next page.

**ACCURATE LAYOUTS.** Of course, there's more to this hand tool than good looks. Like a traditional marking gauge, it provides a quick, accurate way to draw a line or lay out the joinery for a project.

But what's different is how these lines are made. Instead of a sharp, metal pin, it's designed to mark lines using two different methods.

**DRAFTING LEAD.** When working with the grain, a short piece of drafting lead is wedged into the beam of the marking

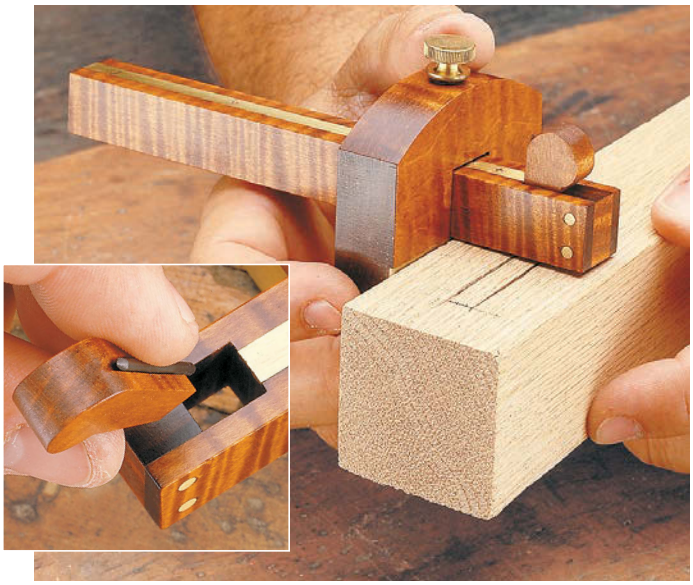

**Drafting Lead.** With a short piece of drafting lead wedged into the opening in the marking gauge (inset photo), it's easy to draw an accurate layout line that won't "follow" the grain.

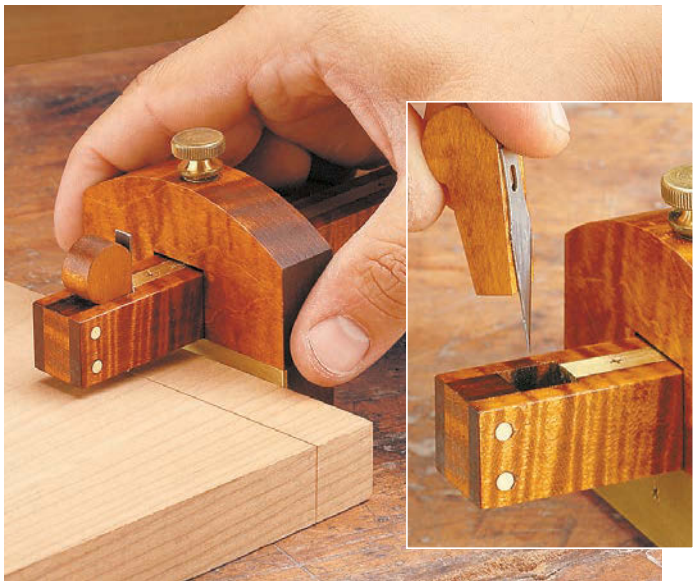

**Blade.** To lay out a line across the grain, use the wedge to secure an X-ACTO blade in the marking gauge (inset photo). The blade scores a crisp, clean line without tearing the wood fibers.

## MATERIALS & SUPPLIES

| | | |
|---|---|---|
| A | Fence (1) | 3/4 x 2 3/8 - 3 |
| B | Beam (1) | 3/4 x 3/4 - 6 7/8 |
| C | Filler Block (1) | 3/8 x 5/8 rgh. - 7/8 rgh. |
| D | Wedge (1) | 3/8 x 5/8 - 1 9/16 |

- (1) 3/4" x 3" Brass Plate (1/16" thick)
- (7) #4 x 1/2" Fh Brass Woodscrews
- (1) 1/4"-20 Knurled Knob w/1/2"-long Stud
- (1) 1/4"-20 Brass Insert
- (1) 5/16"-dia. Shoe (7/16" long)
- (1) 1/4" x 6" Brass Strip (1/16" thick)
- (2) 1/8"-dia. Brass Rods (3/4" long)

gauge, as shown in the left photo on the previous page. The nice thing about the lead is it doesn't veer off and "follow" the grain like a metal pin.

**X-ACTO BLADE.** To score a line across the grain, you can replace the lead with a blade that fits an X-ACTO knife (right photo). Unlike the ragged line and torn fibers that are sometimes left by a metal pin, this blade severs the wood and makes a crisp, clean cut. Note: I picked up No. 24 blades from an art supply store.

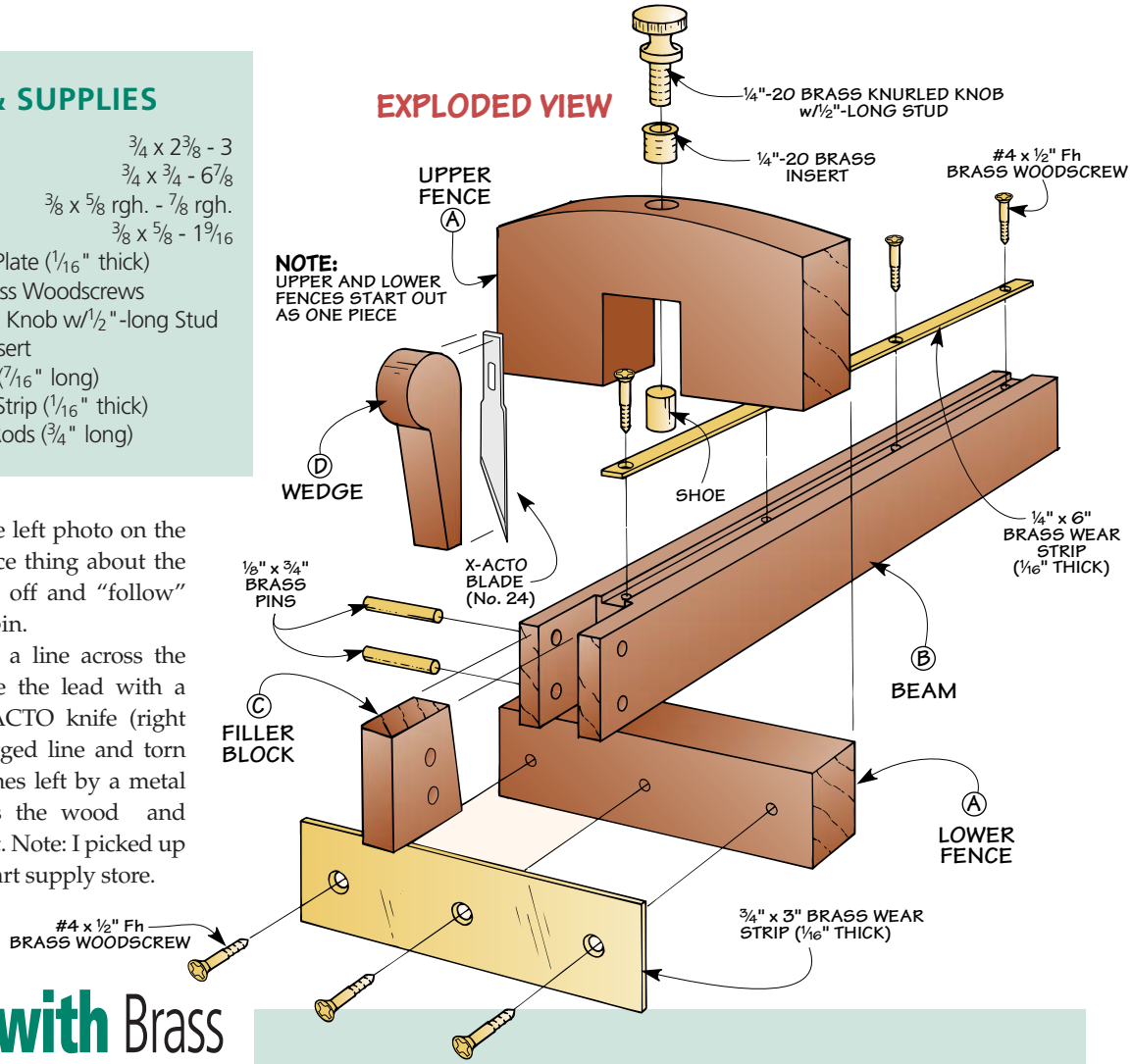


# Working with Brass

It's not difficult to get the brass strips on the marking gauge to fit flawlessly. All it takes are a few easy-to-follow techniques.

**Cutting.** Brass is a relatively "soft" metal, so it's easy to cut with a hack saw. I cut the strips for the marking gauge 1/32" longer than needed and then sanded them flush after assembly.

**Flat & Square.** The strips must be flat and square. The problem is the edges and ends get rounded over in the manufacturing process. So I sand the strips flat and file the ends square, as shown in Steps 1 and 2.

**Countersink Bit.** Another way to improve the appearance of the strips is to make sure the mounting screws sit flat in the countersinks. To do that, I use a special bit with a single cutting flute that produces a smooth countersink (Step 3).

**1** Flatten the Face. To flatten a brass strip, sand it on a piece of 120-grit sandpaper attached to a flat surface.

**2** Square Ends. Using the end of a rabbeted block as a guide, square the ends of the strip with a smooth mill file.

**3** With a countersink bit mounted in the drill press, rotate the chuck by hand to produce a smooth surface.

# sliding **Fence**

I began by making a fence that slides along the beam of the marking gauge. The fence serves as a guide that rides against the workpiece. This ensures that the line that's marked ends up a uniform distance in from the edge (or end) of the board.

**TWO-PART FENCE.** If you look at Figure 1, you can see that the fence is made up of two parts: an upper and a lower fence piece. To create an opening that fits over the beam, the upper piece is notched. Then later, the two pieces are glued together to form the opening in the fence.

One thing to be aware of is these fence pieces are quite small. (Even when the fence is glued up, it's only about the size of a credit card.) That's too small to work with them safely on a table saw.

So as you can see in Figure 2, I started with an oversize blank of ¾"-thick hardwood. It's a good idea to use a blank that's large enough for both fence pieces. That way, when they're glued together later, you'll be able to match the grain to create a joint line that's nearly invisible.

**RIP A STRIP.** With blank in hand, the first step is to rip a narrow strip that will be used to make the lower fence (Figures 2 and 2a). You can set this strip aside for now. The remaining part is used to make the upper fence.

**LAYOUT.** Start by laying out the length of the upper fence as well as the notch that will form the opening (Figures 2 and 2b). You'll also need to draw a large arc near the top of the piece, as shown in the margin below left.

**CUT NOTCH.** Now you're ready to cut the notch. The table saw and a standard combination blade will make quick work of this. To prevent chipout on the back of the piece, it's best to attach an auxiliary fence to the miter gauge (Figure 2b). Then after raising the blade for a full-depth pass, make a series of cuts, nibbling away the waste to form the notch.

**DRILL INSERT HOLE.** The next step is to drill a hole in the upper fence piece. A look at Figure 1 shows that this hole is sized to accept a threaded insert. (It's installed later in the top of the fence.)

The purpose of the insert is simple. When you tighten a knurled knob into the insert, it pushes a metal "shoe" against the beam of the marking gauge. (See Cross Section in Figure 1, above.) The downward pressure applied by the brass shoe holds the fence at the desired setting.

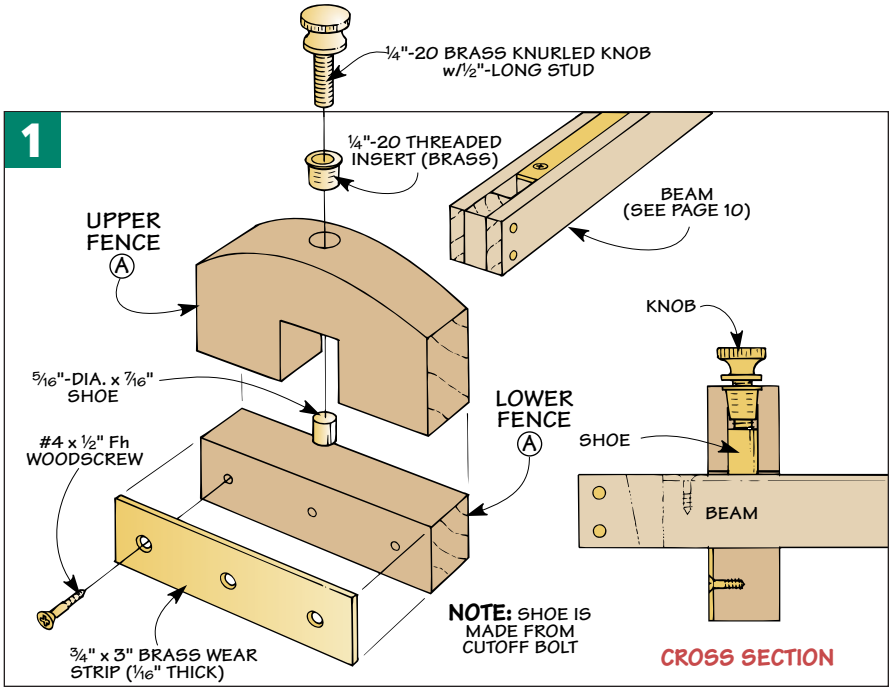


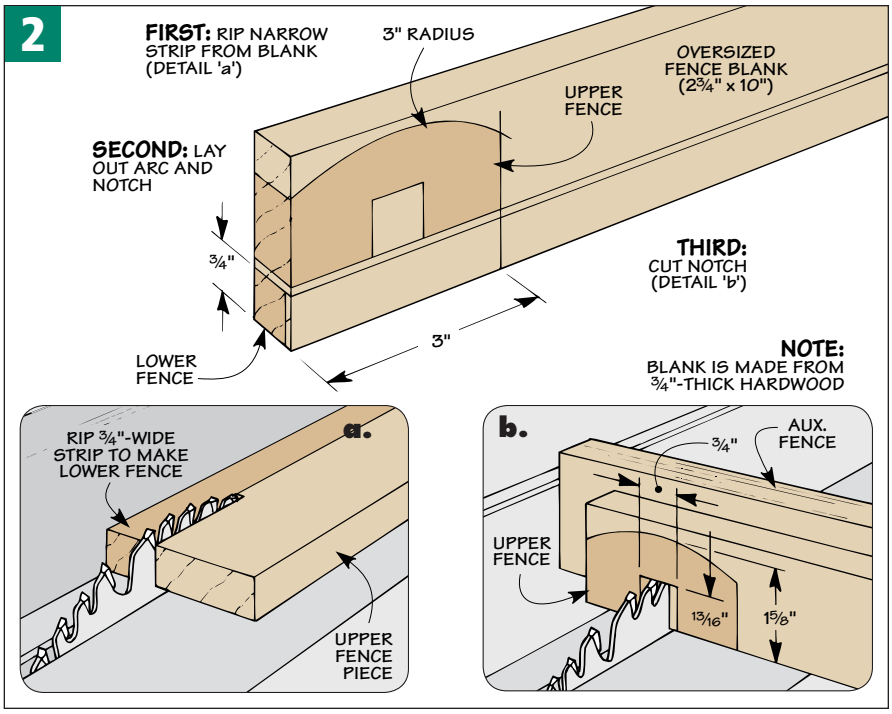


## Shop Tip: Layout

**Drawing Arc.** A block supports the tip of the compass when drawing the large arc on the upper fence piece.

The hole for the insert (and shoe) is centered on the notch. To locate it accurately, you'll want to drill the hole from the notched side, not the top (Figure 3). It's also a good idea to use a backer board to prevent chipout when the bit breaks through.

**LOWER FENCE.** Before installing the insert, turn your attention to the lower fence. Notice in Figure 1 that there's a brass strip attached to this piece. It creates a durable surface that resists wear. (Brass strips are available from most hobby stores.)

This wear strip fits in a shallow recess in the face of the fence. The goal is to end up with a recess that's just deep enough so the wear strip fits flush with the fence. This way, the fence will sit flat against a workpiece.

An easy way to accomplish that is to trim off the front edge of the lower fence (Figure 4). Just be sure that the amount of material removed equals the thickness of the brass strip (1/16"), as shown in Figure 4a.

**GLUE UP FENCE.** At this point, you're ready to edge-glue the two fence pieces together (Figure 5). Remember, to create a joint line that virtually disappears, orient the pieces exactly like they were before the lower strip was ripped from the blank.

Once the glue dries, there are just a few things left to complete the fence. But first, you'll need to crosscut it to final length. (I cut my fence 3" long.)

**CUT TO SHAPE.** Next, to prevent the sharp corners of the fence from digging into my hand, I cut a gentle arc on the top edge (Figure 6). A band saw (or sabre saw) is all that's needed here. Either way, you'll want to stay about 1/16" to the waste side of the line.

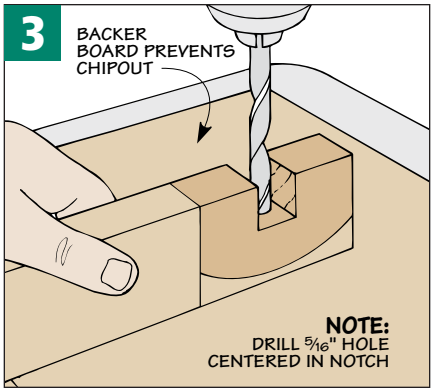


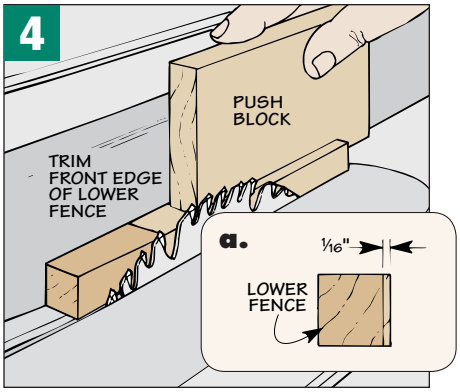


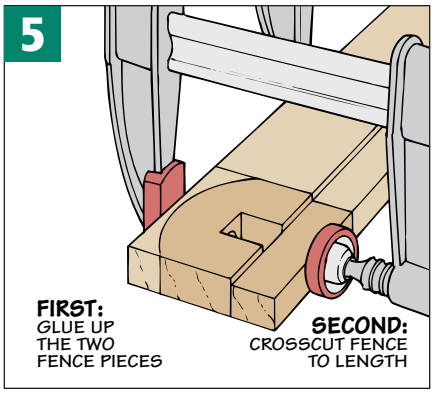


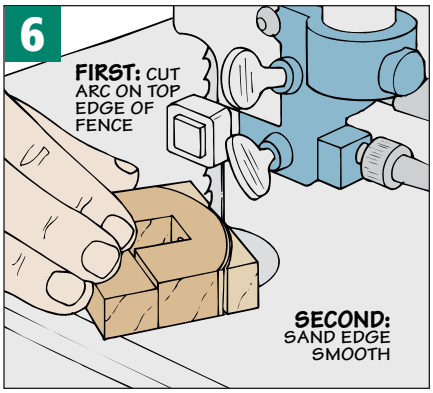


**INSTALL INSERT.** After sanding the edge smooth, it's time to install the threaded insert in top of the fence. It fits down into the hole that was drilled earlier. The important thing is to get it started straight in. What works well is to tap it lightly with a hammer. Then use a vise to slowly press the insert into place, as shown in Figure 7.

Notice in Figure 7a that the insert has a lip around the top that won't fit into the hole. It's not a big deal, but I wanted the insert flush with the top of the fence. Since the brass is quite soft, a sanding block makes short work of that (Figure 7b).

**ATTACH WEAR STRIP.** Attaching the brass wear strip takes a bit longer, but it's a fairly straightforward process. The information on working with brass (page 61) should help you get a good fit between the wear strip and the fence.

Start by cutting the wear strip to the same length as the fence. After sanding the strip flat and filing off any burrs, the next step is to drill countersunk shank holes for the mounting screws.

The thing to watch here is the depth of the countersinks. To create a nearly seamless fit, you want the screw heads to sit "proud," as shown in the margin. Then just file and sand them flush with the strip.

**INSTALL KNOB & SHOE.** All that's left to complete the fence is to add the knurled knob and shoe that are used to lock the fence. The knob threads into the insert in top of the fence (Figure 1). As for the shoe, I cut a short (7/16") section from the smooth shank of a 5/16"-dia. bolt and stuck it in the hole.

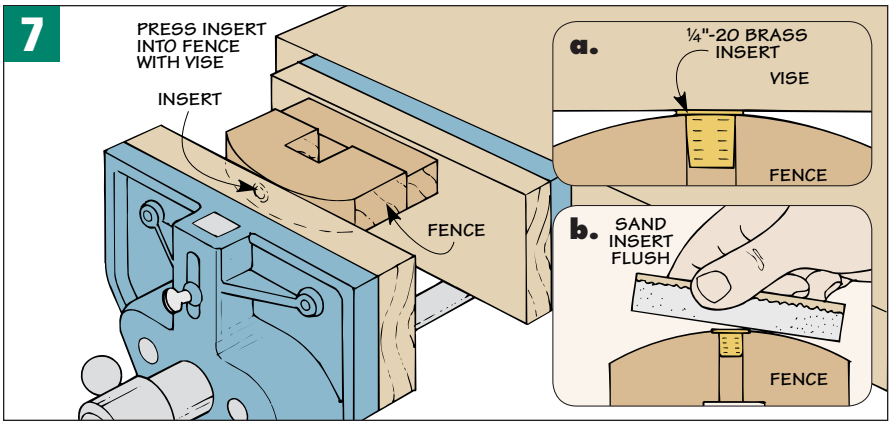

**Top Trick.** To create an almost invisible seam, drill the countersinks so the screw heads sit "proud" (upper photo). Then file and sand them flush (lower photo).

# a solid **Beam**

With the fence complete, I set about making the beam. This is a cigar-length, square block of wood that guides the fence as you slide it back and forth (Figure 8). A brass wear strip on top protects the surface of the beam when you tighten the fence. And an opening in the end houses a wood wedge that holds the lead (or blade) tightly in place.

**ON THE BEAM.** As I mentioned, the beam (B) is a squared-up stick of wood. (I used maple.) To produce accurate results, it's important to get the beam to fit just right into the opening in the fence. If it's too tight, the fence is hard to slide. Too loose, and it wobbles from side to side.

**PREPARE BLANK.** The key to ending up with a perfect fit is to start by carefully preparing the wood blank used for the beam. Start by planing a board ¾" thick and then ripping it to width to fit the opening in the fence. Then crosscut the beam (B) to final length. (I made a 7"-long beam.)

**WEDGE OPENING.** After squaring up the blank, the next step is to create an angled opening in the end of the beam that holds the wedge.

This is a simple two-step process. First, a notch is cut in the end of the beam (Figure 8). Second, a wedge-shaped block is added to "fill" the end of the notch.

**CUT THE NOTCH.** A quick way to cut the notch is to use the table saw. This requires standing the beam on end to make a pass across the saw blade. So how do you keep it from tipping when making the cut?

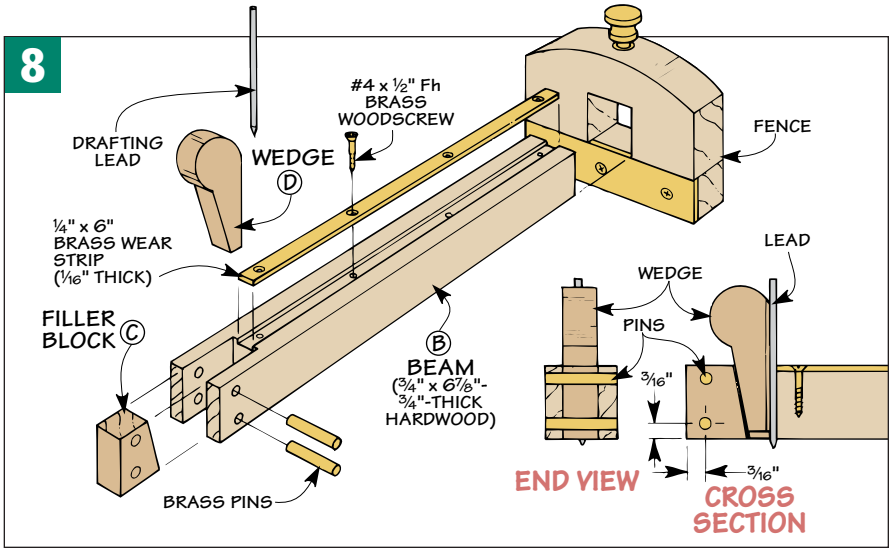


The trick is to clamp the beam to a T-shaped support (Figure 9). With one piece of the support riding on the rip fence and the other backing up the workpiece, it's easy to hold the beam steady when making a cut.

Start by raising the saw blade to a height of ⅞" (Figure 9a). Then set the rip fence so the blade is roughly centered on the beam. Now make two passes, flipping the workpiece around for the second pass (Figure 9b).

This will produce a centered notch, but it needs to be a bit wider. So just nudge the fence away from the blade and make two more passes to end up with a ⅜"-wide notch.

**WEAR STRIP.** The next step is to add the brass wear strip. If you look at Figure 8, you can see that this wear strips fits in a shallow groove in the top of the beam.

Here again, the idea is to make the strip fit flush with the beam. As before, I used a 1/16"-thick strip. Only this time, it's ¼" wide. So I adjusted the blade on the table saw to make a 1/16"-deep cut. Then I used the same two-pass method as before to center the groove (Figures 10 and 10a).

Start by setting the fence so the blade is roughly centered on the beam. Then make two passes, turning the workpiece end for end between each one. If necessary, repeat the process until the strip fits (Figure 10b). Then just screw the strip in place as before.

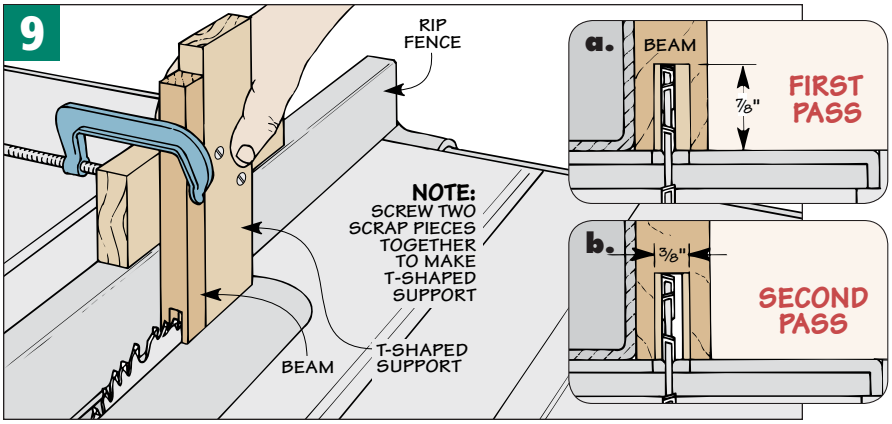


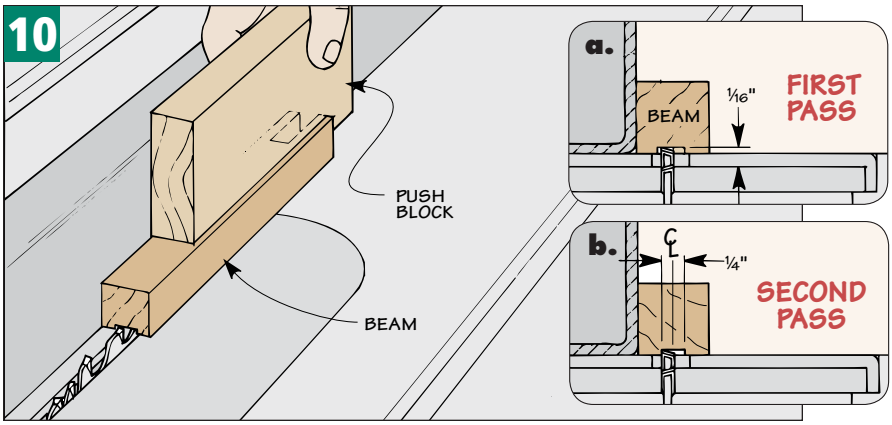


## FILLER BLOCK & WEDGE

All that's left is to add two small pieces: a filler block that's fixed in

the end of the beam and a removable wood wedge (Figure 8).

Notice that the inside of the filler block is cut at an angle. This creates an angled opening in the beam. By pushing the wedge (which has a matching angle) down into the opening, it pinches the lead (or blade) against the beam and holds it in place.

**OVERSIZE BLANK.** The filler block and the wedge are quite small. So it's best to make them from an oversize blank. After thicknessing this blank to match the width of the notch in the beam (3/8"), lay out the filler block and wedge, as shown in Figure 11a. Note: The dimensions for the filler block are rough measurements.

**FILLER BLOCK.** Once the filler block (C) is cut to rough size, you're ready to glue it in place. The important thing here is the size of the opening formed by the block. To make sure the wedge fits tightly, glue in the filler block to create a 3/8"-long opening at the top (Figure 11).

**BRASS PINS.** After trimming the block flush, I added two brass pins to help strengthen the joint. (They also add a decorative touch.) The pins are short pieces cut from a brass rod. It's best to make them slightly longer than the width of the beam. Then, after tapping the pins into holes drilled in the beam, file (or sand) them flush.

**WEDGE.** Now you can turn your attention to the wedge. It's just a block of wood with a rounded knob on top and a V-shaped groove in the straight side to hold the lead.

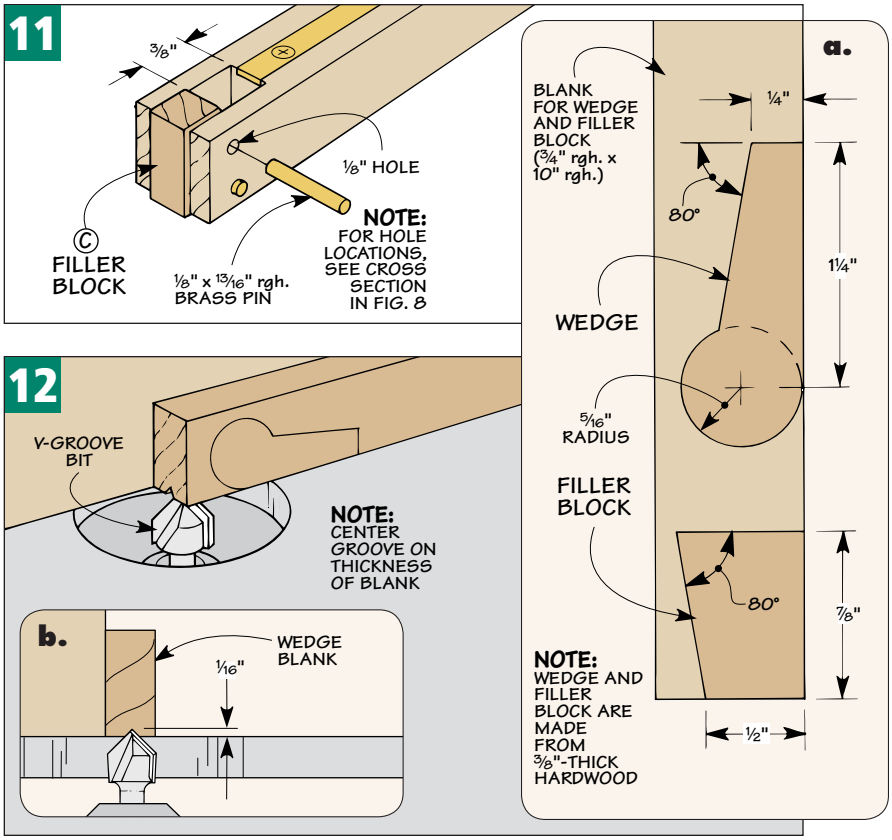


For safety, it's best to rout this groove before cutting the wedge from the blank (Figures 12 and 12b). Then cut and sand the wedge to shape. Note: You may need to sand the sides of the wedge to get it to fit into the opening, as shown in margin.

**FINISHING TOUCHES.** To add some finishing touches to this special hand tool, I stained it with an aniline dye. (See box below.) Then I wiped on three coats of an oil-based finish.

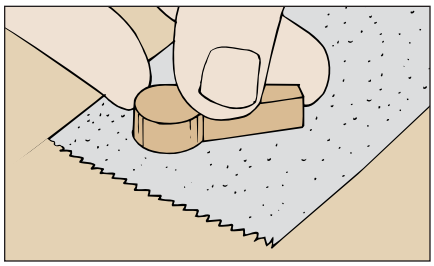

**Delicate Sanding.** To fit the wedge into the opening in the beam, sand the sides lightly on a flat surface.

## Using Aniline Dyes

Since I chose a highly-figured piece of wood for the marking gauge, I wanted that figure to "pop." The solution was to use an aniline dye. It produces a deep, rich color that doesn't obscure the grain.

**Water-Soluble.** The type of dye I use is a powder that dissolves in hot water. Because it's a water-based dye, it tends to "fuzz" the wood a bit. But you can keep this grain-raising to a minimum.

The trick is to dampen the wood before applying the dye. Then lightly sand the "whiskers." (I use sandpaper that's one grit finer than that used on the project.)

**Application.** A rag or brush is all that's needed to apply the dye. To avoid lap marks, keep the surface wet and wipe off the excess before it dries.

Be aware the dye will appear chalky or dull when it dries. But applying a finish will restore the vivid color. Just be sure to use an oil-based finish since water will redissolve the dye. (Note: See Sources on page 98 for where to buy aniline dyes.)

# Shop Accessories

No matter what your woodworking skill level, these shop accessories and techniques are sure to make you a better woodworker. Each one is designed to help you get the most from your shop time.


THE BEST BENCH VISE..... 68

ULTIMATE SHOOTING BOARD.....76

RESTORING A BENCH PLANE.....82

SAW BLADE FILING JIG ..... 86

TRI-FOLD DRILL BIT INDEX..... 90

SHARPENING A PLANE IRON..... 96

# the best Bench Vise

## Raise your work to a whole new level. This vise provides a solid grip and all-around access.

The two large vises on my workbench supply a lot of clamping versatility to hold a range of workpieces steady. But sometimes, I find them a little lacking.

When I'm working with small pieces, or doing detail work that requires a lot of finesse, a regular vise is usually too big and too low to work at comfortably. To solve this problem, I made the add-on vise you see here. The design is based on a traditional style of vise, or étau, that was once common in France and other parts of Europe.

It's made from stout hardwood and rugged Acme threaded rods to deliver all the clamping force of a standard vise but in a compact package. The narrow, profiled jaws let me work on a piece from a variety of angles. Perhaps best of all, the vise is elevated so I'm not stooped over while working — it's a real back-saver.

There's one other benefit I want to mention. The design provides three ways to attach it to just about any worksurface or bench.

# Construction Details

**OVERALL DIMENSIONS:**
4½"W x 18⅛"H x 13¾"D

**NOTE:** REFER TO PAGE 71 FOR SPECIAL-PURPOSE JAW FACES

CURVED TOP OF JAWS MAXIMIZE ACCESS TO WORKPIECE CLAMPED IN VISE

JAW FACES CAN BE REPLACED WHEN WORN

CAPTURED NUT ACCEPTS ACME THREADED ROD

LARGE BOLT SECURES VISE TO WORKBENCH THROUGH BENCH DOG HOLES

VISE SCREW SECURED TO HUB WITH PIN AND EPOXY

WIDE BRACKET LETS YOU CLAMP VISE TO ANY FLAT WORKSURFACE

COTTER PIN ALLOWS FRONT JAW TO RETRACT WHEN VISE IS RELEASED

BENCH NUT CAPTURES HEX NUT TO SECURE VISE IN DOG HOLES

VISE JAWS GLUED UP INTO THICK, RIGID BLANKS TO RESIST DEFLECTION

STEEL BANDS REINFORCE HANDLE HUB

HARDWOOD STOP NUT KEEPS VISE JAWS PARALLEL

SHOP-MADE HANDLE CAPS PROVIDE COMFORTABLE GRIP

**NOTE:** FOR HARDWARE SOURCES, TURN TO PAGE 98

**Vise Mounted.** The end of the rear jaw can be clamped in a bench vise.

## MATERIALS & SUPPLIES

| | | |
|---|---|---|
| **A** | Front/Rear Jaws (2) | 2¼ x 4½ - 18 |
| **B** | Bracket (1) | 2¼ x 4½ - 7¼ |
| **C** | Jaw Faces (2) | ½ x 1⅝ - 4⅝ |
| **D** | Hub (1) | 2 x 2 - 2¾ |
| **E** | Handle (1) | ¾ -dia. x 10 |
| **F** | Caps (2) | 1⅛-dia. x ¾ |
| **G** | Stop Nut (1) | ⅞ x 2 - 2³⁄₁₆ |
| **H** | Bench Nut (1) | 1 x 3 - 3⅜ |

- (5) #8 x 1" Fh Brass Woodscrews
- (1) 1"-6 x 12" Acme Threaded Rod
- (1) ⅝"-8 x 12" Acme Threaded Rod
- (1) 1"-6 Acme Nut
- (1) ⅝"-8 Acme Nut
- (2) 1" Flat Washers
- (1) ⅝" Flat Washer
- (1) ⁵⁄₃₂" x 1½" Cotter Pin
- (1) 1½" x 4" Steel Pipe
- (1) ¼" x 2³⁄₁₆" Steel Rod
- (1) ¾"-10 x 7" Hex Bolt
- (1) ¾"-10 Hex Nut
- (2) ¾" Flat Washers

# heavy-duty **Jaws**

When it comes right down to it, the vise basically consists of a pair of jaws and a mechanism to squeeze them together. The jaws are joined by a pair of threaded rods that serve this purpose. The large, upper rod applies the clamping pressure. The lower rod has a stop nut that serves as a fulcrum and prevents the jaws from racking when tightened. I began work on the vise by making the large, hardwood jaws.

**JAWS.** My goals for the jaws were to provide a firm grip on a workpiece and also give me good access for working. To accomplish the first goal, I made the jaws from 2¼"-thick blanks. (I used white oak.) This stout construction means the jaws won't flex when you tighten the screw.

Stock this thick isn't easy to find. So I glued up each jaw blank from two pieces of thinner stock. You can see this in Figure 1 below. But there's another reason I glued up the jaws. That's to capture a nut for the main screw in the rear jaw, as shown in the side view drawing in Figure 1.

The front jaw blank can be glued up right away. But hold off on the rear jaw. Instead, head over to the drill press with the two jaw components. Drill a counterbore in the back face of the thicker piece to accept an Acme threaded hex nut. I sized the counterbore for a snug, press fit. Then drill a through hole in both pieces to provide clearance for the threaded rod.

Before gluing the jaw pieces together, fit the nut into the counterbore. To keep it from ever working loose, I poured epoxy around the edges.

**A FEW MORE HOLES.** The front jaw needs a through hole as well. But this smaller hole is drilled in a slightly different location from the first (Figure 1). The reason is that while the nut centers the main screw in the hole in the rear jaw, the front jaw rests on the main screw. So to keep the top of the jaws flush, the clearance hole is shifted down a bit.

Once the glue dries on the rear jaw, there are two more holes to drill near the bottom of each jaw. These accept the lower screw. The stopped hole in the front jaw is sized to hold a ⅝" Acme threaded rod. The one in the rear jaw is slightly larger so the jaw won't bind on the rod in use.

**Hardwood Faces.** The faces of the bench vise can be easily replaced if they get damaged or worn.

**1 FIGURE**

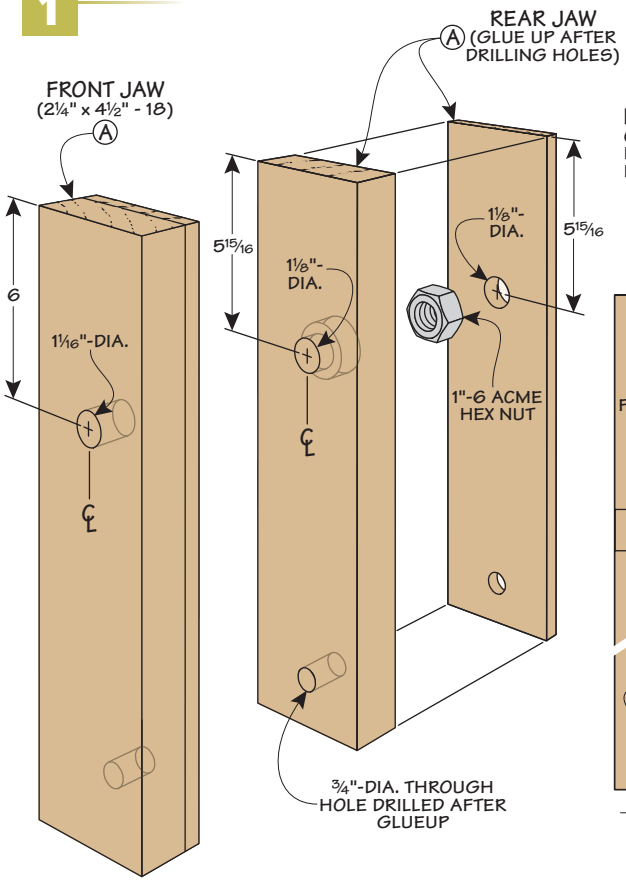


**NOTE:** EACH JAW CONSISTS OF A 1¾"-THICK LAYER AND A ½"-THICK LAYER GLUED TOGETHER

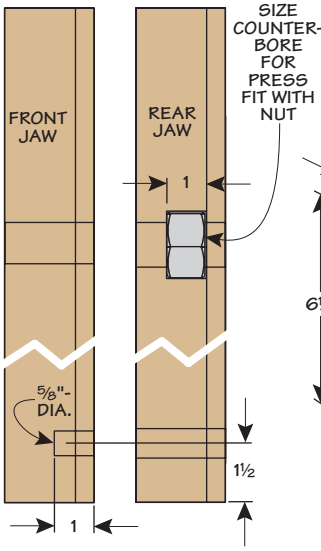


SIDE VIEW

**2 FIGURE**

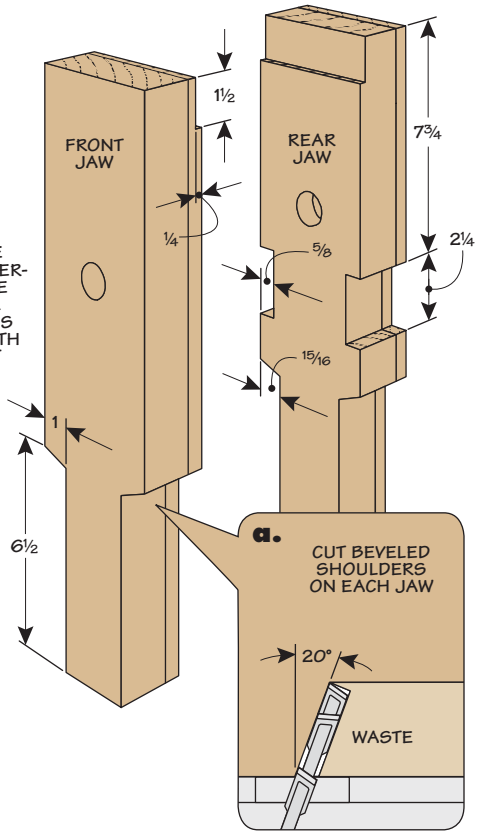

**DETAILS.** After completing the holes, there are some more details to add to each jaw. The first is a shallow rabbet cut along the inside faces, as in Figure 2. Replaceable jaw faces nest here to grip the workpieces. I cut the rabbets at the table saw with a dado blade.

The next detail applies only to the rear jaw. Later you'll add a bracket to the back that lets you attach the vise to your workbench. The bracket locks into notches cut in the rear jaw. Here again, I cut the notches at the table saw with a dado blade.

The bracket is just one option for attaching the vise to a worksurface. You can also clamp it in a vise on your workbench. To do this, I cut down the lower portion of each jaw to make it a little narrower. The shoulder is beveled to transition to the thinner section, as illustrated in Figure 2a. The lower end of the front jaw is a hair narrower than the rear jaw. I did this so that if the vise is clamped in a workbench vise, the front jaw is free to move.

**THROW IN A FEW CURVES.** The final details on the jaws are adding a few curves. The top and bottom of each jaw are shaped, as you can see in Figure 3. The curved top serves to offer greater access to a workpiece clamped in the vise. Then at the bottom of the jaw, a large roundover softens the sharp edge.

**BRACKET.** The next part to make is the bracket. It has a wide notch that fits the notches in the rear jaw. To make the notch, I cut the cheeks at the table saw (Figure 3b). Then the remaining waste is removed at the band saw.

Before gluing the bracket in place, drill a hole in it to match the location of the bench dog holes in your workbench. Finally, round over the sharp corners.

**SPECIAL-PURPOSE FACES.** The last items to add to the jaws are the faces. These are simply cut to size and screwed in place. In the box below, you can see a couple of options for special-purpose faces you may want to consider.

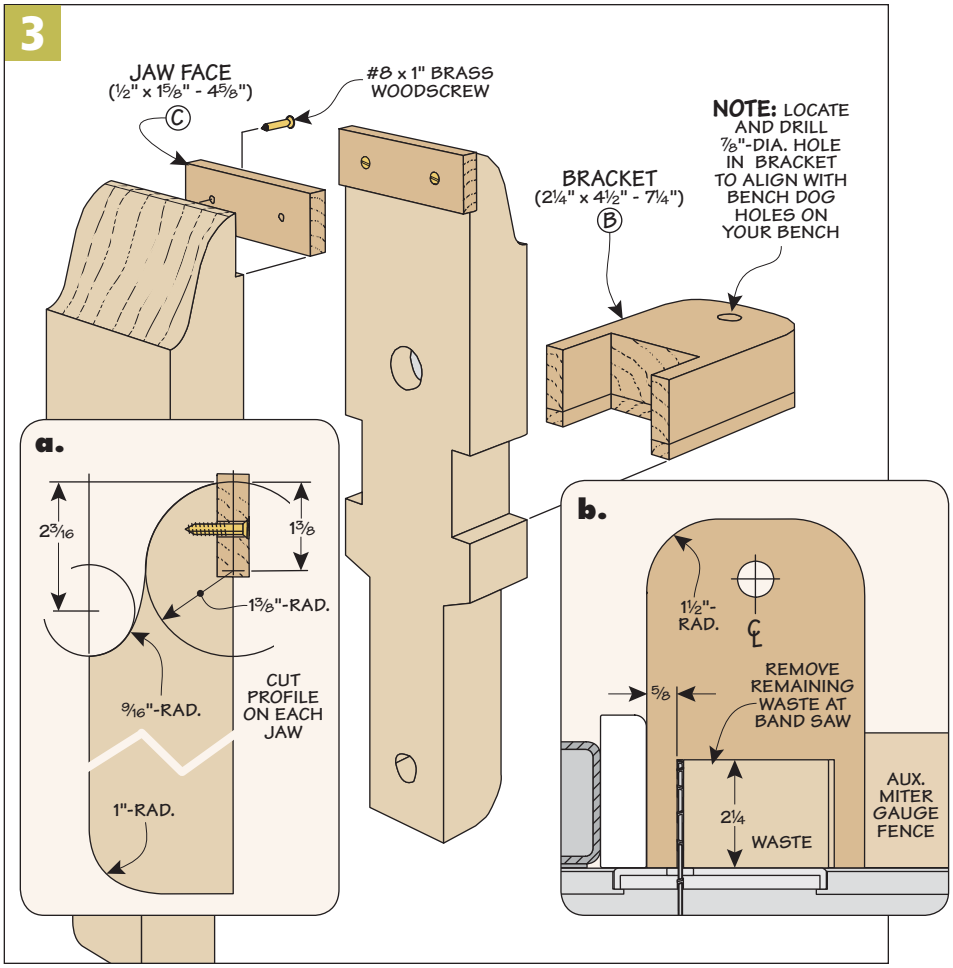


## Special-Purpose Jaw Faces

**V-Groove Jaws.** The series of V-grooves in these faces hold round stock without slipping.

**Leather Jaws.** Leather-lined jaws provide a firm grip on odd-shaped objects without leaving vise marks.

# applying the Squeeze

Completing the jaws lets you focus on the mechanism that supplies the clamping pressure — the main screw. There's more to it than just a section of Acme threaded rod, however.

Earlier, I mentioned how the screw threads into a nut captured in the rear jaw. But you need a way to turn the screw and to draw the front jaw against the rear jaw. That task falls to the hub.

In the photo below right, you can see what the finished hub looks like. A wide bearing surface on the end pushes the front jaw. And a cross handle allows you to apply an iron grip to a workpiece in the vise. teel bands on each end keep the hub from splitting.

**MAKING THE HUB.** Although the final shape of the hub is round, you don't need a lathe to make it. Instead, with a little hand work, you can get a smooth, round hub in short order.

The first few steps take place while the hub is still a square blank, as you can see in Figure 4. I started by marking the centerpoint on each end of the hub.

To lay out the final shape of the hub, I used the steel bands as a pattern. The bands are just short sections of steel pipe, cut to length. Just be sure to cut the ends as square as possible.

I centered the steel band on the end and traced both the inside and outside of the band. The outside line is the final profile of the hub. The inner line marks the side of a short tenon that the band will slide over.

While the hub was still square I drilled a couple of holes. The first was a stopped hole in the end sized to accept the main screw. The other hole is a cross hole for the hardwood handle.

After drilling the holes, you can cut the hub to rough shape. I did this at the band saw. As you make this cut, stay as close to the line as possible. This will make cleaning up the hub much easier.

**ROUND TENON.** Creating the tenon on each end of the hub is the next order of business. It starts with cutting the shoulder. I did this with a hand saw, as shown in Figure 5. I put a strip of tape on the blade to act as a depth gauge for the cuts. Don't worry if you cut a little deeper. It will be covered by the steel band.

In Figure 6, you can see how to cut the sides of the tenon. I used a chisel and a mallet to pop small sections of the waste off. If you taper the tenon slightly, it will ease the fit of the band in place. But you'll still have a nice tight fit at the end. Then to make sure

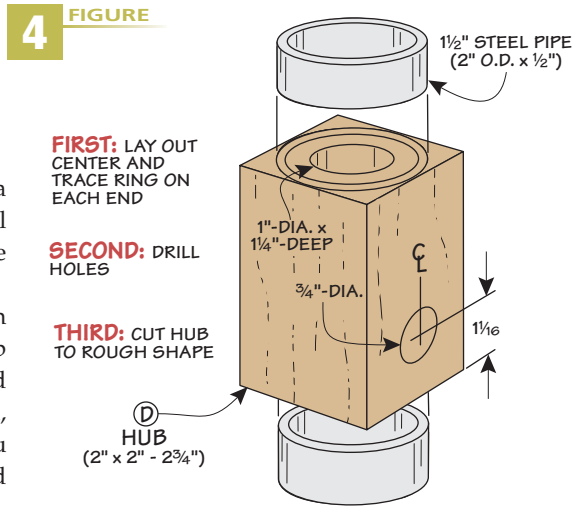


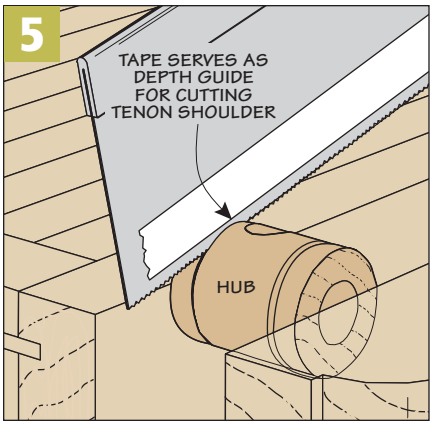


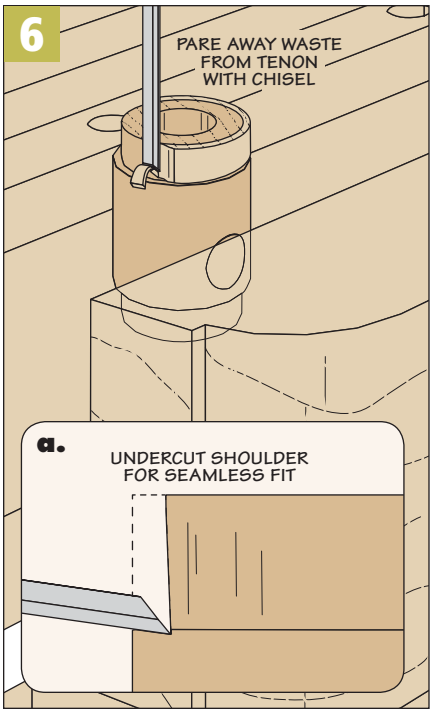


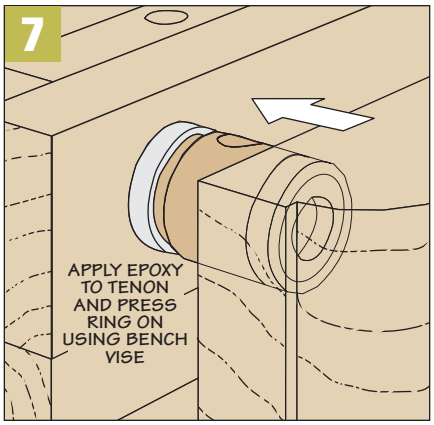

**Apply Force.** A hardwood hub strengthened by steel bands lets you firmly lock the vise down.

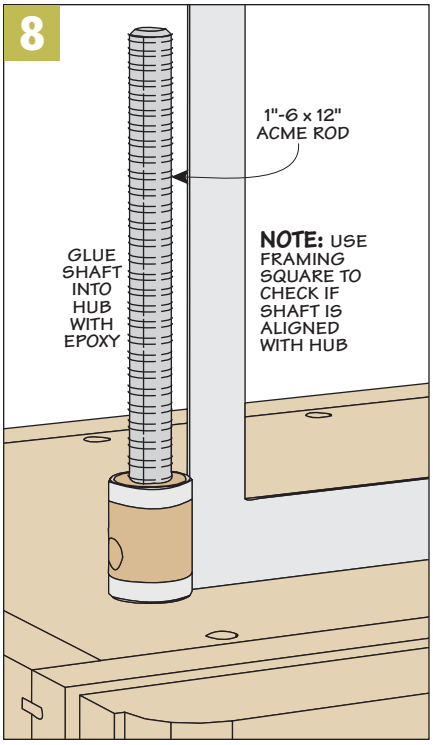


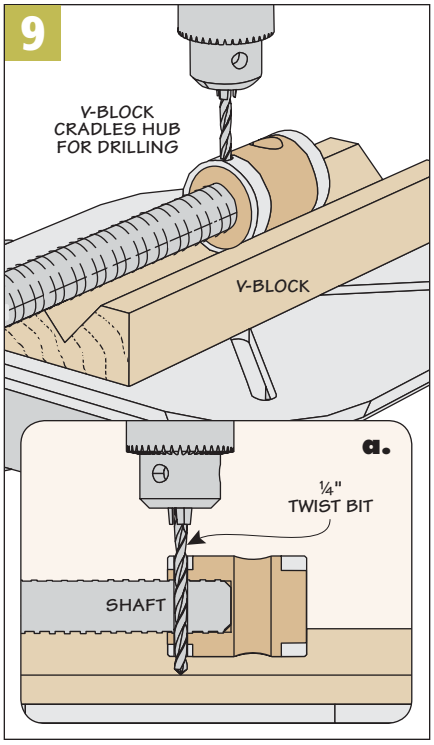


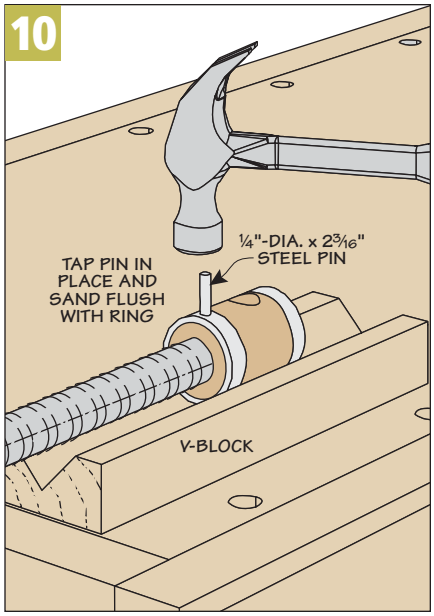


the seam between the band and the shoulder was tight, I undercut the shoulder of the tenon slightly. This is illustrated in Figure 6a.

After testing the fit and fine-tuning the tenon, you're ready to install the bands. For a solid connection, I buttered the tenons with some epoxy and then pressed each band in place. To supply even pressure, I used my bench vise for the task, as you can see in Figure 7.

**FINAL SHAPING.** Once the epoxy dries, you can finish shaping the hub. You'll need to remove any epoxy squeezeout and smooth the wood hub flush with the metal bands.

I started by knocking down the high spots on the hub. A file works great here since it cuts quickly and isn't damaged if you catch the bands. Then I finished up with sandpaper to smooth both the wood and the metal.

**ADDING THE ROD.** At this stage, you can glue the threaded rod into the hub. This is shown in Figure 8. The key here is keeping the rod aligned with the hub. I used a framing square to check the alignment at several points around the hub.

To reinforce this connection, I added a pin through the band, hub, and rod, as shown in Figures 9 and 10. To hold the hub while drilling, I made a V-block.

**CONNECTING THE FRONT JAW.** On its own, the hub will apply pressure to the front jaw. But when the screw is released, you want it to retract the jaw. For this to happen, you need to add a retaining pin. You can see this in Figure 11.

I fit the rod through two washers and the jaw and marked a point between the threads (Figure 11a). You want to leave a little play here so the jaw doesn't bind.

Then it's back to the drill press to drill a hole in the screw to accept a cotter pin, as shown in Figures 11b and 11c. The cotter pin allows you to separate the whole assembly for other work down the road.

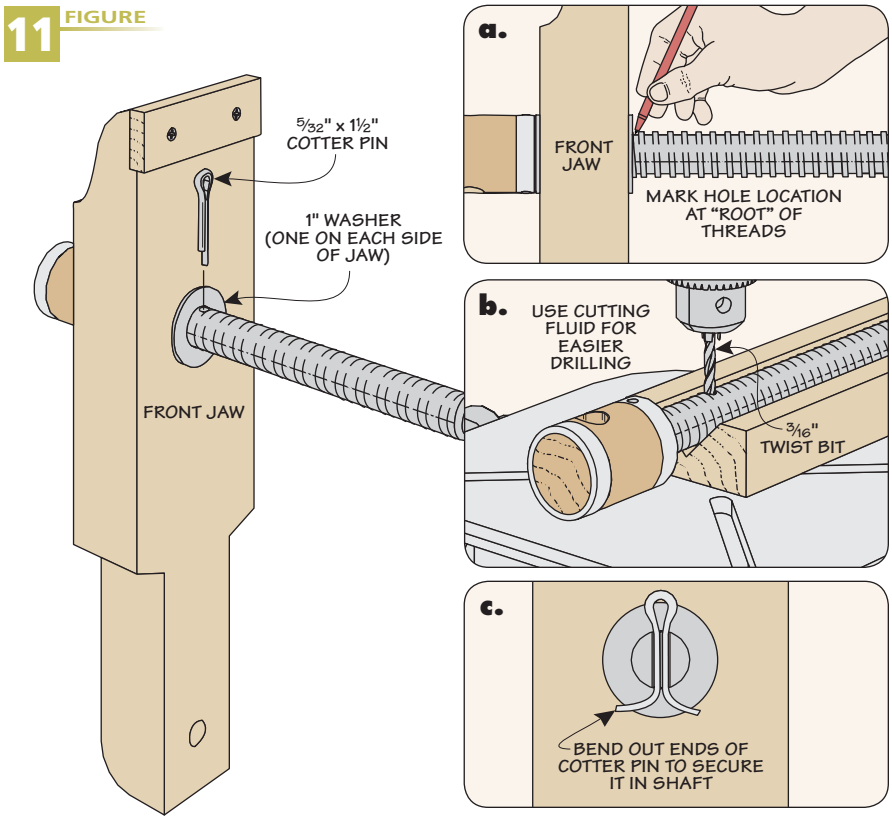

# wrapping up the Vise

The hard work is behind you at this stage in the game. From here on out, you just need to wrap up a few items. This includes adding a handle to the hub, installing the lower screw, and gathering some hardware to attach the vise to your workbench.

**THE HANDLE.** The handle in the hub is where muscle power turns into clamping force. I made the handle from a length of white oak dowel to match the other parts of the vise.

Select a dowel with straight grain. This allows it to resist breaking and stay straight over time. You may need to sand the dowel slightly so that it slides easily back and forth in the hub.

**END CAPS.** A plain dowel will slip right out of the hub when you let go of it. So I added a hardwood cap to each end of the dowel.

The caps are made in a three-step process. Figures 13 and 14 highlight the steps, but I want to cover a few of the details.

The trick is drilling a centered hole in such a small, round piece. The solution is to drill the stopped hole for the handle in a larger blank first. I used a fence and a stop block to hold the blank in position while I drilled the hole with a Forstner bit.

For the second step, I replaced the Forstner bit with a hole saw (remove the center pilot bit) and drilled out the cap from the blank, as shown in Figure 13.

The last step is to smooth out the cap and give it a gentle barrel shape. Here again, I did the work at the drill press, as you can see in Figure 14 below. For a step-by-step look at this process, refer to *WoodsmithSpecials.com*.

**Even Clamping.** A shop-made nut on the lower screw acts as a stop so the jaws stay parallel to provide even clamping pressure.

I wanted to make it possible to easily remove the handle from the hub down the road. So I only glued one cap onto the handle. To attach the other one, you can use one of the two methods illustrated in Figure 12a. I drove a screw through the end of the cap and into the end of the handle. Another option is use the same trick that was used to shape the cap. You can slip a piece of plastic between the cap and handle, and trim away the excess.

## LOWER SCREW

The main, upper screw does most of the work in the vise. However, the lower screw plays a critical part in the operation. Without the lower screw, the front jaw would rack out of parallel and provide uneven pressure. The key is the stop nut. When set to match the thickness of the workpiece clamped in the vise, it keeps the jaws parallel with each other.

FIGURE 12

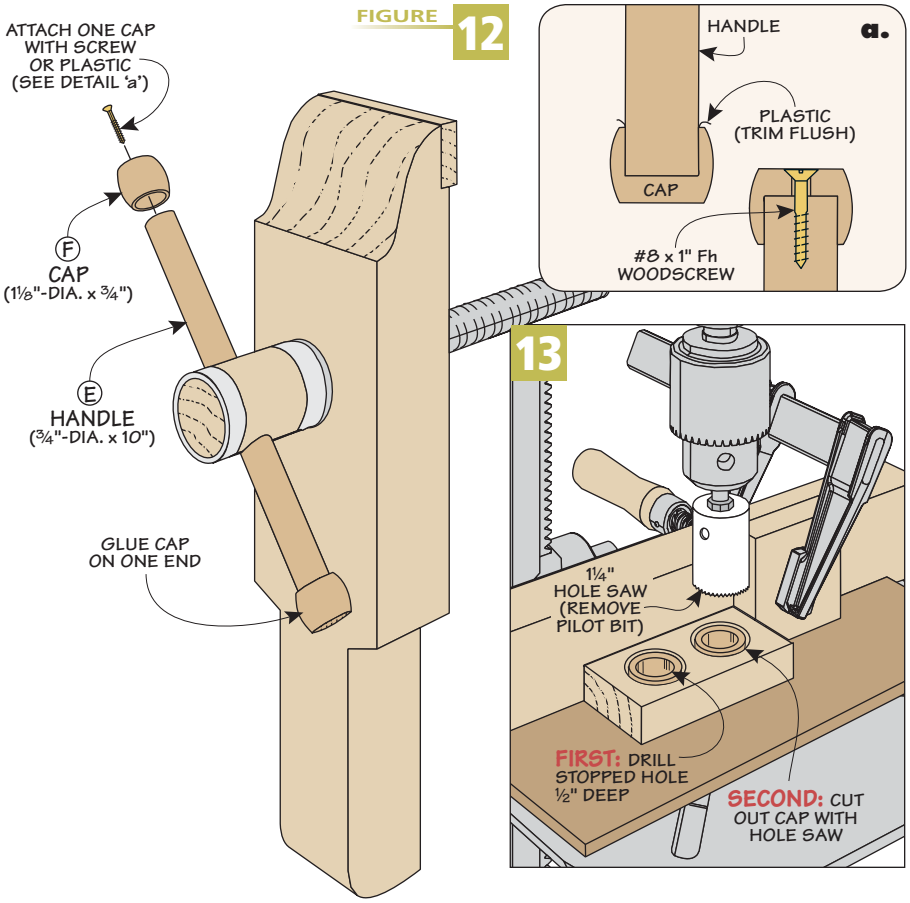





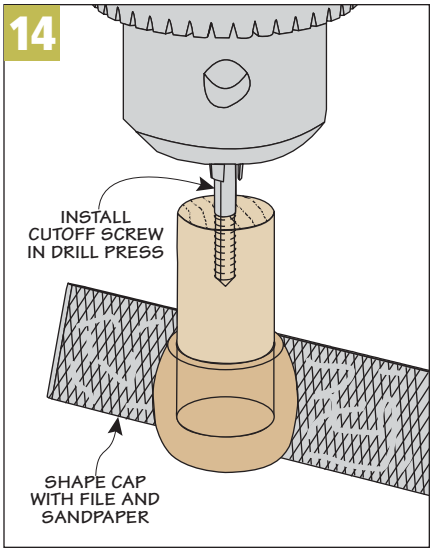

**INSTALLING THE ROD.** The lower screw is installed in the front jaw and slides through the hole in the rear jaw. Just like the main screw and hub, I secured the lower screw in the front jaw with epoxy. And once again, it's a good idea to use a square to make sure it's perpendicular to the jaw, as you can see in Figure 15.

**STOP NUT.** You could simply use a standard Acme threaded nut and a washer in this situation. But the relatively small size of the nut makes it difficult to grasp when you make adjustments.

My answer is to inset the steel nut in a large wood nut. The steel nut is glued into a counterbore in the wood nut (Figure 15a). For more details on how to lay out a hexagonal nut and cut it to size, refer to the Online Extra.

**BENCH HARDWARE.** The bracket on the back of the vise allows you to clamp the vise to almost any surface. But I also included a way to attach it to my workbench using a bench dog hole. I slipped a long bolt through the bracket and workbench and secured it with a washer and nut below the bench, as in Figures 16 and 16a. But just like the lower screw, I made a larger wood nut for an easier grip. The only difference is that this one is a bit larger, as illustrated in Figure 16b.

With the rear jaw secured to the workbench, you can thread the main screw along with the front jaw into the captured nut in the rear jaw. The lower screw will slide in place in the rear jaw. Then you're ready to put your new vise to work.

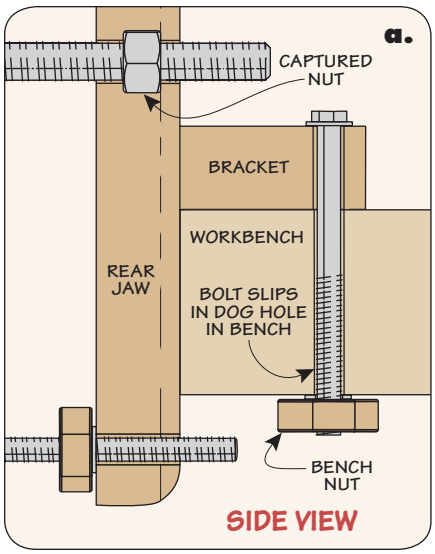


FIGURE 15

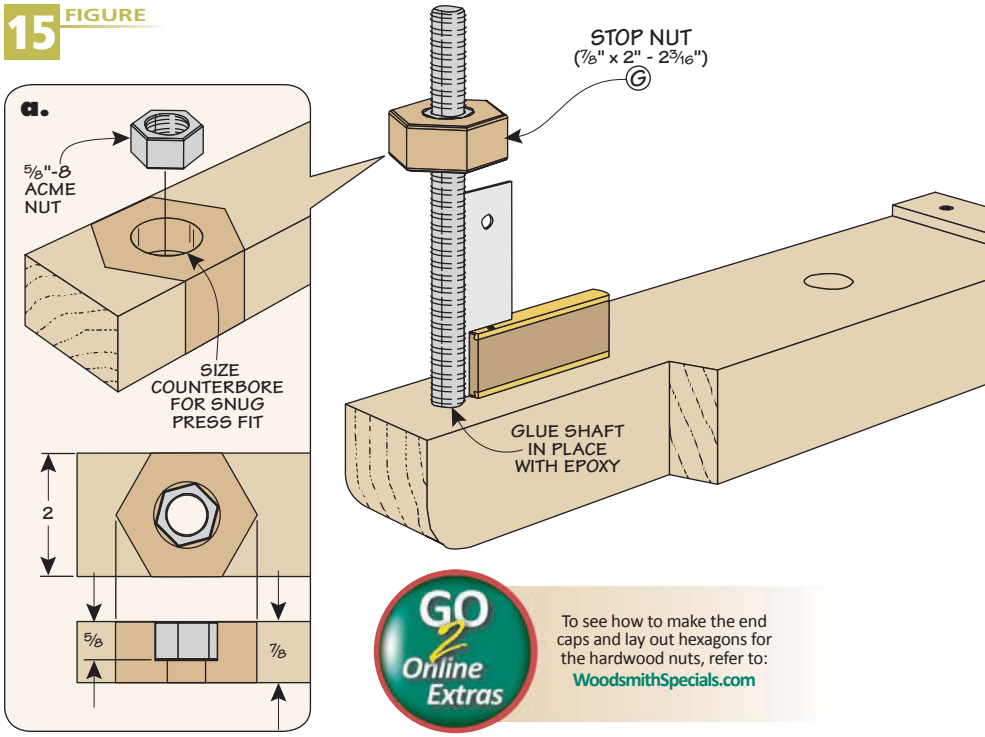


GO 2 Online Extras

To see how to make the end caps and lay out hexagons for the hardwood nuts, refer to: WoodsmithSpecials.com

FIGURE 16

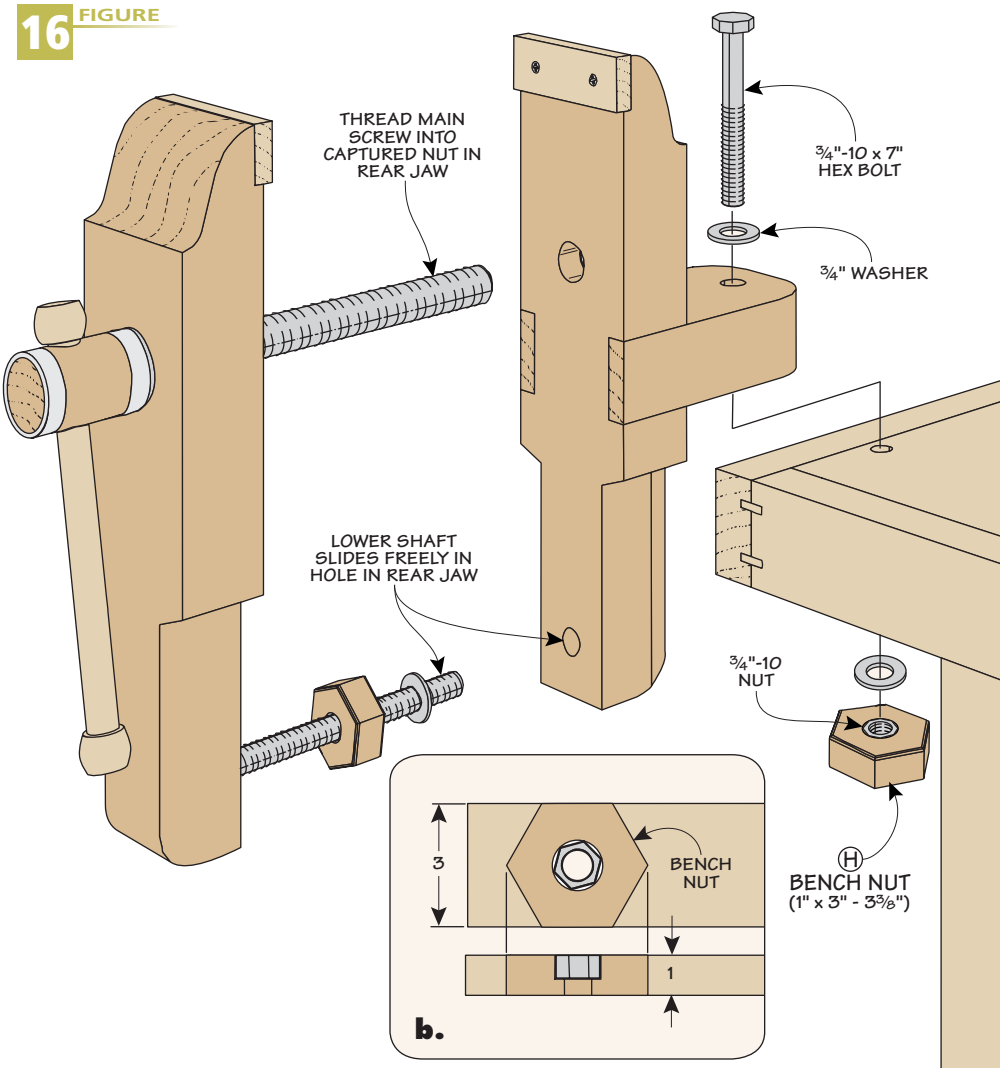

# micro-adjustable Shooting Board

## Fine-tuning joinery is a cinch with this precision bench accessory.

Shooting boards used to be a staple in most woodworking shops. And for good reason — there's no better tool for trimming workpieces for gap-free joinery. All you need is a sharp hand plane and a quiet weekend in the shop.

With the design of the shooting board you see here, you gain the ability to "tweak" the angle of the workpiece as you trim it to length. This is made possible with the two micro-adjusters. There's one each for 45° and 90° cuts. It allows you to make very small adjustments within a range of a few degrees. This level of precision makes it a whole lot easier to improve your craftsmanship.

**Micro-Adjustable.** When trimming miters or squaring up the end of a workpiece, the built-in micro-adjusters allow you to fine-tune the angle for a precise fit.

# Construction Details

**OVERALL DIMENSIONS:**
24"W x 4 1/16"H x 13 1/2"D

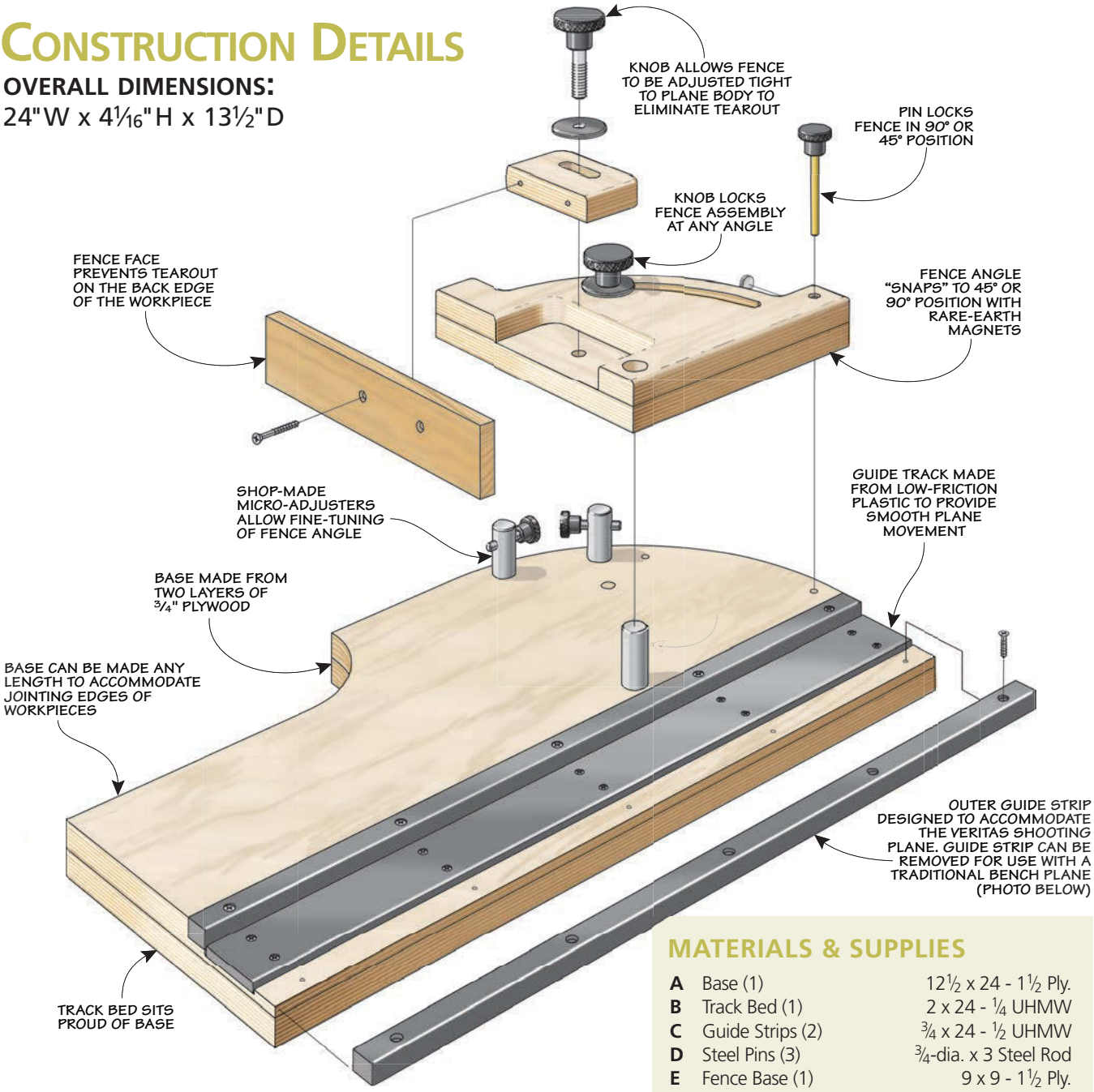

**Use Any Plane.** You can use a specialized shooting plane, like the one in the main photo, or any standard bench plane such as a low-angle smoothing plane or the No. 5 shown here.

## MATERIALS & SUPPLIES

| | | |
|---|---|---|
| **A** | Base (1) | 12 1/2 x 24 - 1 1/2 Ply. |
| **B** | Track Bed (1) | 2 x 24 - 1/4 UHMW |
| **C** | Guide Strips (2) | 3/4 x 24 - 1/2 UHMW |
| **D** | Steel Pins (3) | 3/4-dia. x 3 Steel Rod |
| **E** | Fence Base (1) | 9 x 9 - 1 1/2 Ply. |
| **F** | Fence Mount (1) | 2 1/4 - 3 5/8 - 3/4 Ply. |
| **G** | Fence (1) | 1/2 x 2 - 10 |

- (2) 3/4"-dia. Knurled Knobs w/ 1/4"-20 x 1 1/4" Stud
- (2) 1 1/2"-dia. Knurled Knobs w/ 3/8"-16 x 3" Stud
- (1) 1"-dia. Knurled Knob w/ 1/4"-dia. Hole
- (2) 3/8"-16 T-Nuts
- (2) 1/4"-dia. x 3" Brass Rod
- (1) 3/4"-dia. x 12" Steel Rod
- (2) 3/8"-dia. Rare-Earth Magnets w/Cups & Screws
- (2) 3/8" x 1 1/4" O.D. Black Oxide Washers
- (2) #8 x 1 1/2" Fh Woodscrews
- (5) #6 x 1 1/4" Fh Woodscrews
- (10) #6 x 3/4" Fh Woodscrews
- (5) #6 x 1 1/4" Rh Woodscrews
- (5) #6 Washers

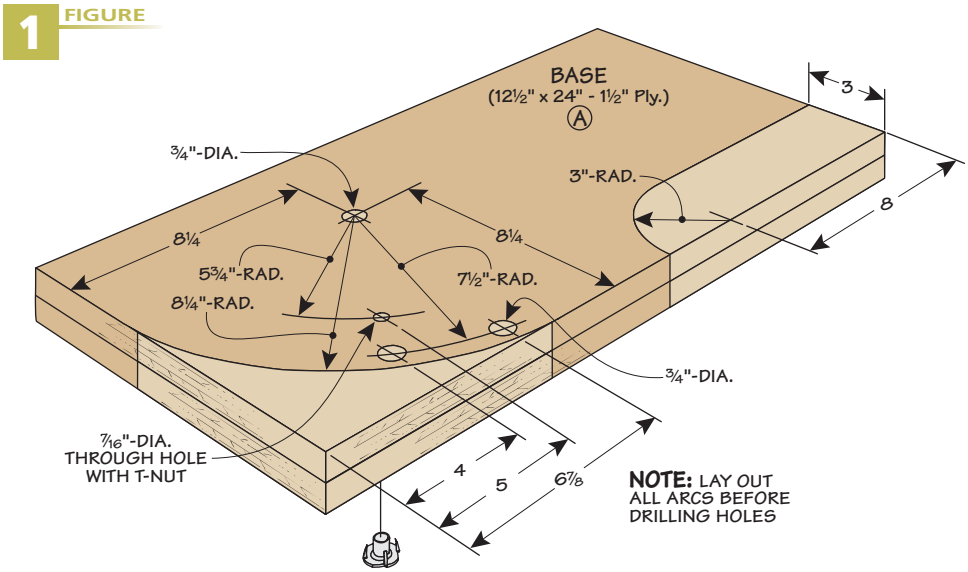


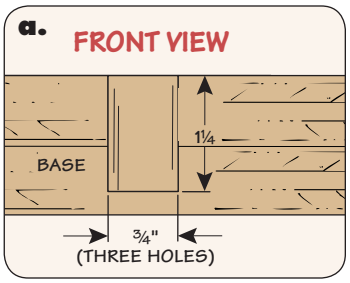


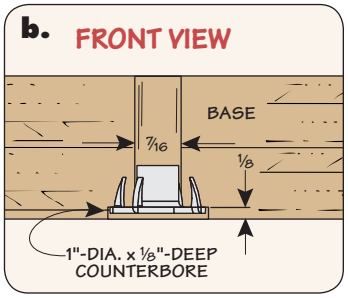


# building a Base

The base of the shooting board forms the foundation for all of the working components, so it's important to take your time in building it. It's made from two layers of Baltic birch plywood.

**GLUE FIRST.** To start on the base, I cut a piece of plywood for one of the layers to final overall size. Cut the other layer slightly oversized, glue the two layers together, and then trim the layers flush (Figure 1).

It's a good idea to lay out all of the hole locations while the blank is still square. And you can draw the outside shape of the base so you can cut it to final shape later.

**DRILLING.** There's a T-nut on the bottom of the base that's used for the locking knob on the pivoting fence base you'll make later. After drilling a shallow counterbore and through hole, tap the T-nut in place (Figures 1 and 1b).

There are three holes for ¾"-diameter steel pins that you'll install later. One pin serves as the pivot for the fence base. The other two pins are for the micro-adjusters. A Forstner bit is ideal for drilling these holes since it creates smooth sides and a flat bottom to seat the pins.

**RABBET & GROOVE.** There's another task you can complete before cutting the base to its final shape. And that's to cut a stepped groove along one edge of the base blank. This groove holds the strips of UHMW for the guide track. Take a look at how these all fit together in Figure 2.

I started by cutting a rabbet first (Figure 2a). Then lay out the narrow groove, reset the dado blade height, and cut the shallow groove.

**CUT TO SHAPE.** Before moving on, now is the time to cut the base to shape and sand it smooth. I also applied a clear finish to the base at this point.

**PLASTIC STRIPS.** As shown in Figure 2, there are three plastic strips to install. The wide strip serves as a smooth-gliding surface for the hand plane. The inner strip guides the sole of the plane during use. The outer strip is used to create a track for the *Veritas* shooting plane. If you wish to use another bench plane on the shooting board, simply leave the outer guide strip off.

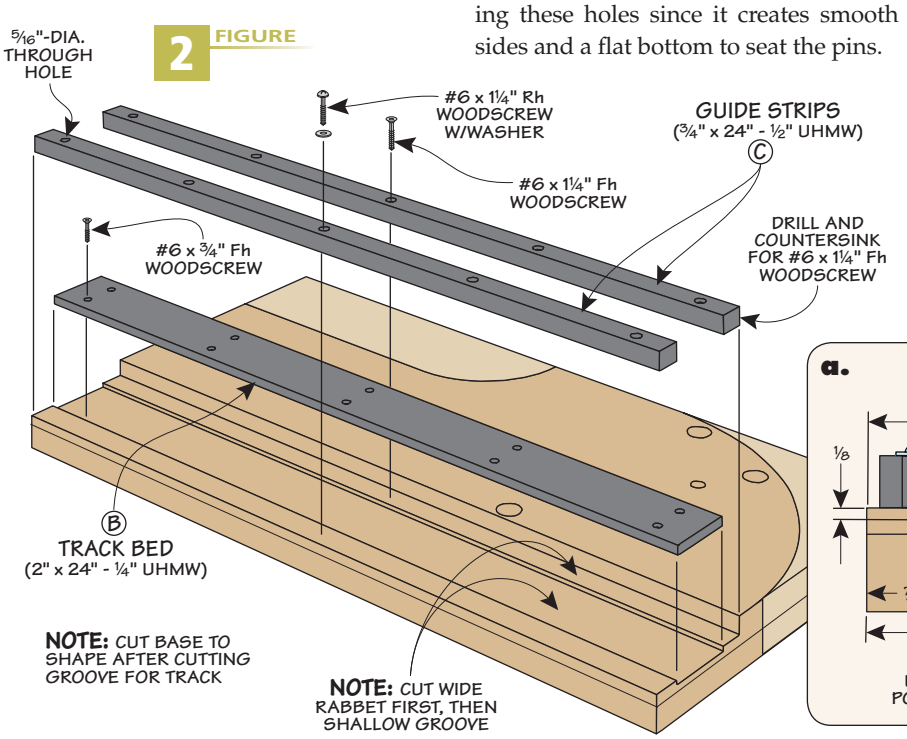


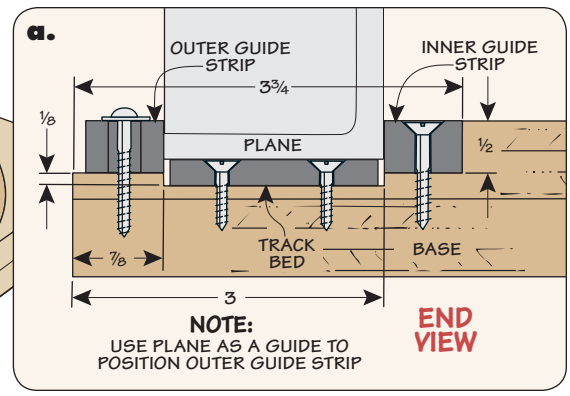

To install the plastic strips, I drilled countersunk screw holes. You'll want to make sure that the screws on the wide strip for the track bed are recessed below the surface to avoid the heads protruding and scratching up the sides of the plane.

**MICRO-ADJUSTERS.** The unique and most useful parts of the shooting board are the micro-adjusters. They allow fine movements of the fence angle to sneak up on the fit of a workpiece. As shown in Figure 3 and the photos below, they're easy to make.

You start by cutting the steel rod to length. Then step over to the drill press to drill the clearance hole for tapping threads all the way through the rod, as illustrated in Figure 3b.

To make it easier to cut the rod square with a hack saw and hold the rod in position for drilling, I made a small holding jig. You can see how it works in the box below. It's simply a wood block with a ¾"-diameter hole drilled 3" deep in the end and split down the middle by a saw kerf. The saw kerf allows you to securely clamp the rod for cutting. The end of the block serves as a guide for your hack saw to get a square cut.

The jig also provides a way to drill and tap the threaded through hole.

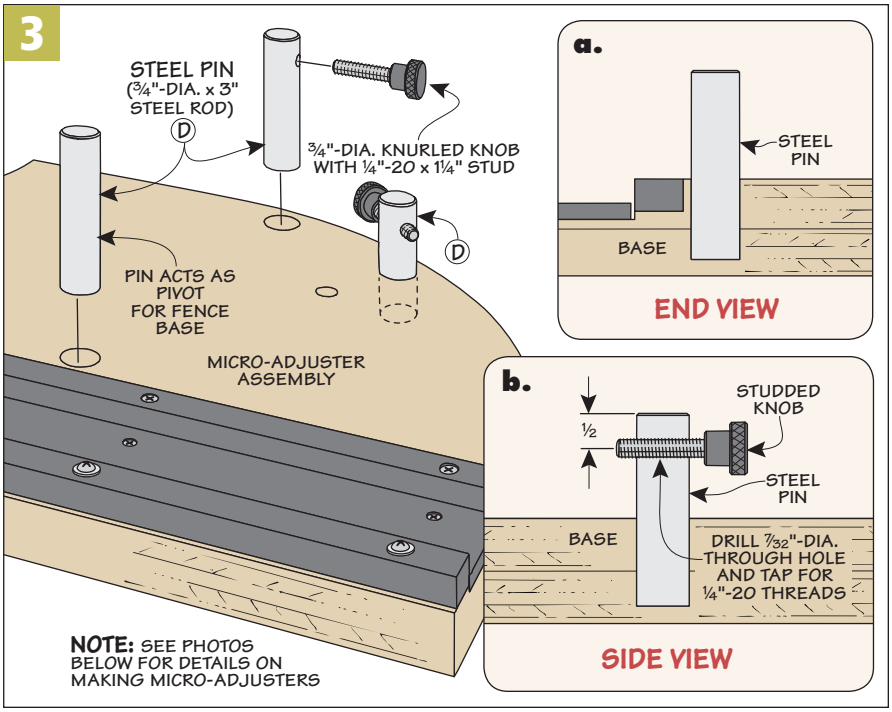


Drill a 7/32"-diameter hole through the kerf in the block, ½" from the end. Use a punch before drilling through the rod. At that point, pull the rod out enough to clamp it in a vise and use a tap. A few drops of oil make drilling and tapping easier.

Once you have the pins completed for the micro-adjusters, cut a third pin that will serve as a pivot for the fence base. File or grind a small chamfer on the ends of each pin. I used epoxy to secure the pivot pin into the base.

You can thread a studded knob into each micro-adjuster and slip them into their holes in the shooting board base. The photos below provide a few helpful tips for making the micro-adjusters.

## Cut, Drill & Tap

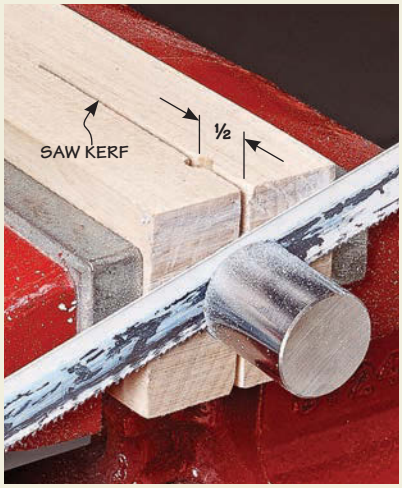


**Cutting.** A block of wood can be made into a jig for holding the steel rod while cutting and drilling.

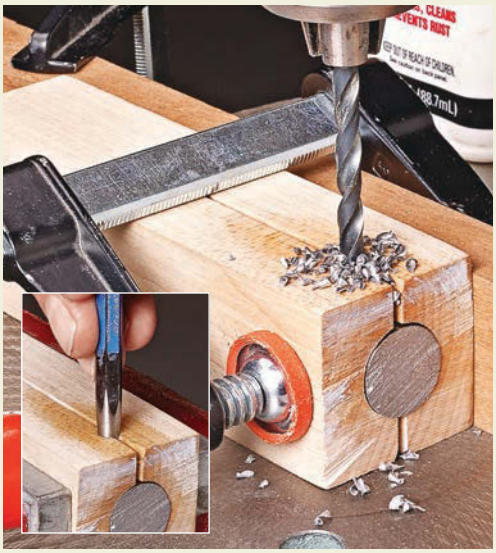

**Punch, Then Drill.** A punch helps to keep the bit centered (inset). Then use a gentle touch to keep the bit from wandering.

**Tapping.** Use the block and a vise to secure the steel pin while tapping the threads of the hole.

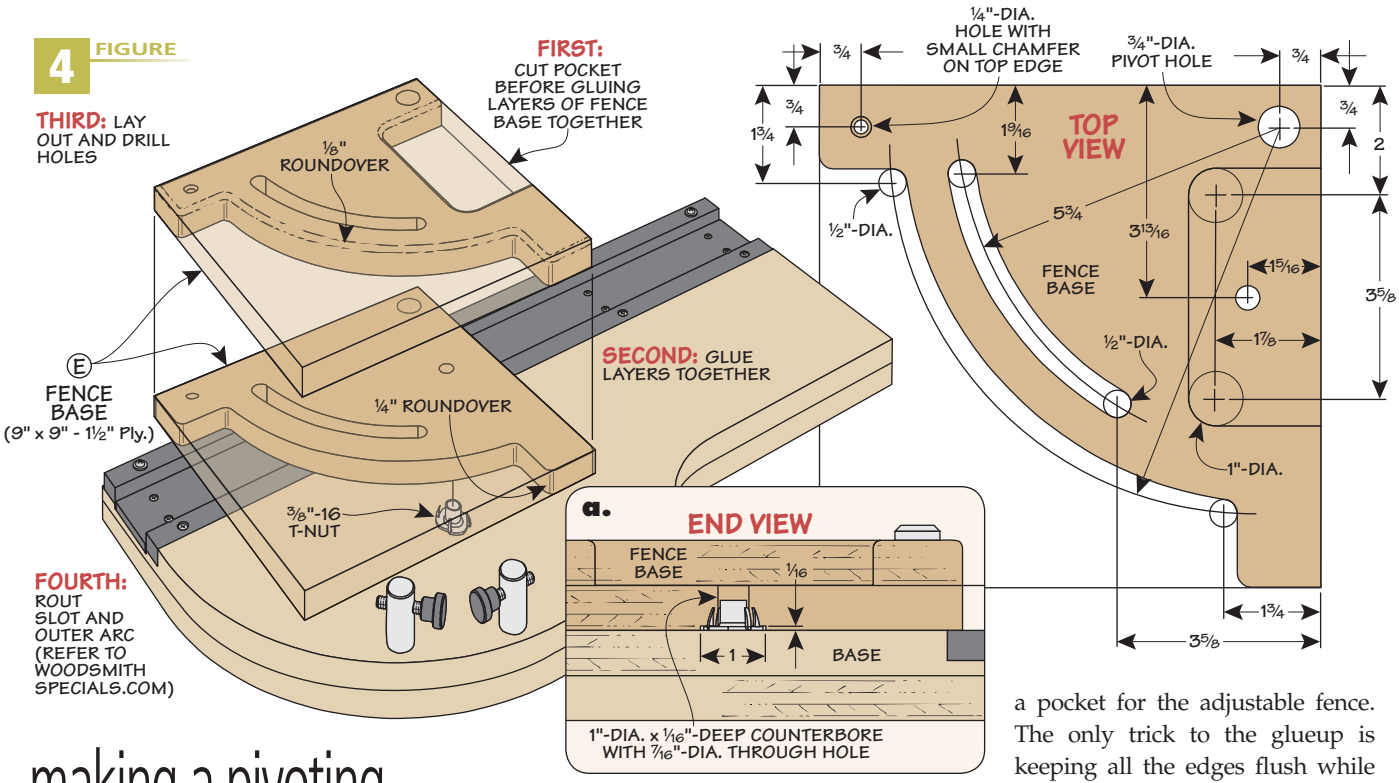


# making a pivoting Fence

The pivoting fence base teams up with the pair of micro-adjusters and a locking pin to provide precise angle settings. A sliding fence helps to minimize tearout when using the shooting board. The pivoting fence base is also made up of two layers of plywood. I started by cutting two square blanks to size (Figure 4). It's important to make sure the edges are square to each other since the accuracy of the shooting board depends on this.

Before gluing the two layers together, the top layer needs a little work. I cut out a pocket for the adjustable fence. The only trick to the glueup is keeping all the edges flush while the glue dries. Clamps spanning the glue lines in both directions will help.

After cleaning up the edges, you can drill the hole for the index pin, as shown in Figure 5a. And there's a counterbored through hole on the underside for a T-nut (Figure 4a).

Now you're ready to start shaping the fence base. I drilled the pivot hole and

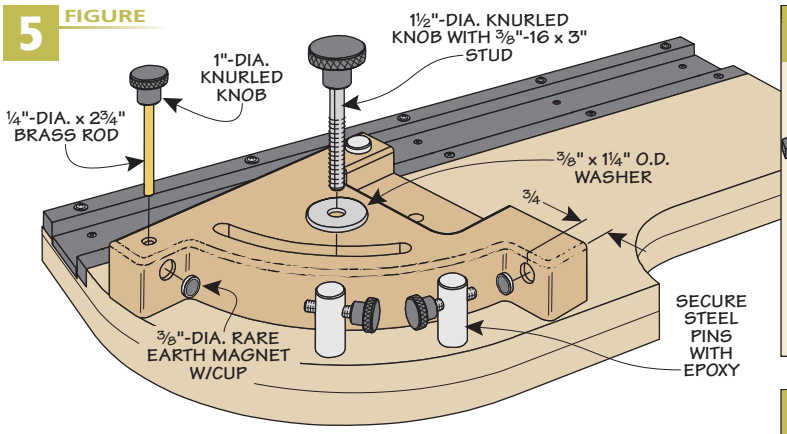


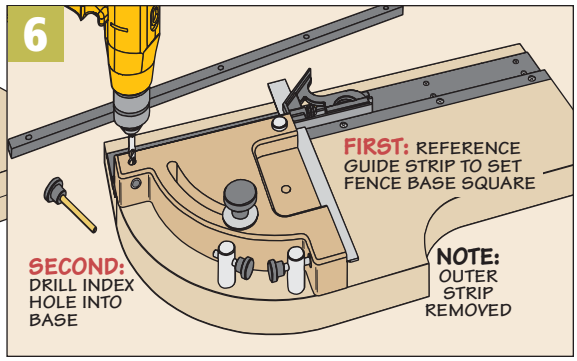


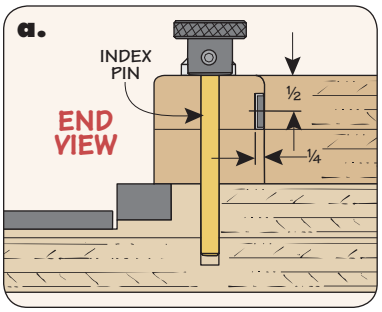


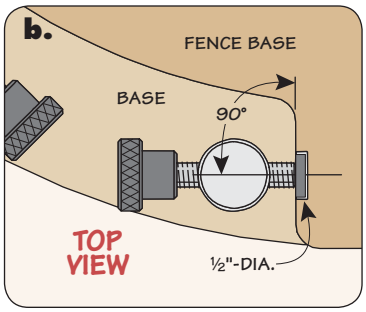


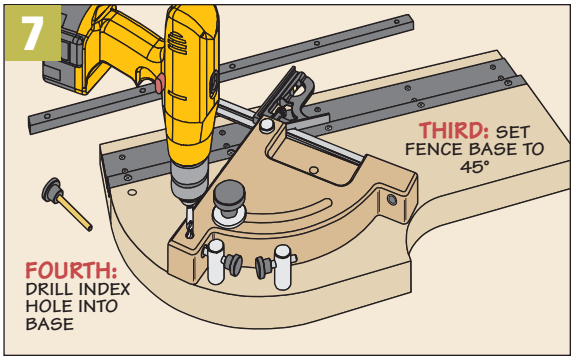

GO 2 Online Extras

For a technique article on routing arcs and curved slots, go to: WoodsmithSpecials.com

then used a router with a trammel base to cut the outer arc and curved slot. Refer to the article at *WoodsmithSpecials.com* for details on how to do this.

To create clean starting and stopping points for the arcs, I first drilled holes at the ends. After routing the shape, the band saw makes quick work of cutting the "tabs" on the two corners to remove the waste. Follow that up by rounding over the top edges and sanding everything smooth.

I installed the fence base on the pivot pin to determine where to drill holes for the rare-earth magnets (Figure 5). Pivot the fence in each direction to butt each tab against the end of the threaded stud on the micro-adjuster. Mark the vertical centerline of the stud on the tab, remove the fence base, and drill the shallow counterbores for the magnet cups.

**INDEXING.** To align the fence base onto the base of the jig, use a combination square, as in Figures 6 and 7. Once you have the fence base rotated to both the 45° and 90° positions, use the hole for the locking pin as a guide to drill into the base.

**INDEX PIN.** The next logical step is to make the index pin, as shown in Figure 5a. I used a length of brass rod and a knob. The knob has a set screw for holding the rod in place.

**SLIDING FENCE.** All that's left to do now is make the sliding fence assembly (Figure 8). It's made up of a slotted fence mount and a simple fence. The slot allows it to be adjusted tight to the plane body to eliminate tearout as the plane iron exits the workpiece. The fence face is a replaceable piece of hardwood. It's fastened to the fence mount with a couple of screws (Figure 8a).

**USING THE SHOOTING BOARD.** The photos below show some tips for setting up the shooting board. The key is to set your plane for a thin shaving. And since you'll usually be shaving end grain, it's important to make sure the blade is very sharp.

After you make a few swipes on your workpieces with the hand plane, you'll immediately see the benefits of using a shooting board. And you'll be well on your way to crafting gap-free joinery on all of your woodworking projects.

FIGURE 8

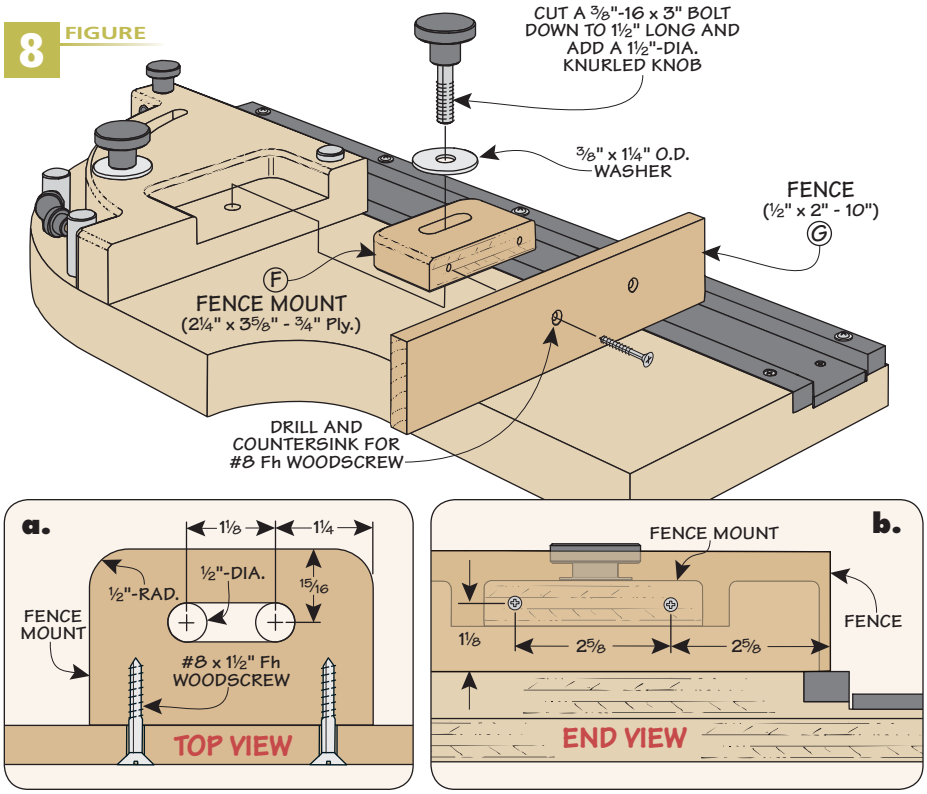


## Using the Shooting Board

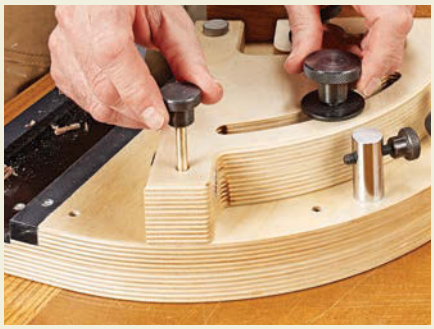

**Coarse Adjustment.** Loosen locking knob and lift the index pin to pivot the fence base to the desired position.

**Fine Adjustment.** With the locking knob loosened, fine-tune the angle of the fence by turning the micro-adjuster knob.

**Adjust the Fence.** Loosen the knob to butt the adjustable fence up against the sole of the plane.

# restoring a Bench Plane

All it takes to transform a neglected plane into a useful tool is a little old-fashioned elbow grease.

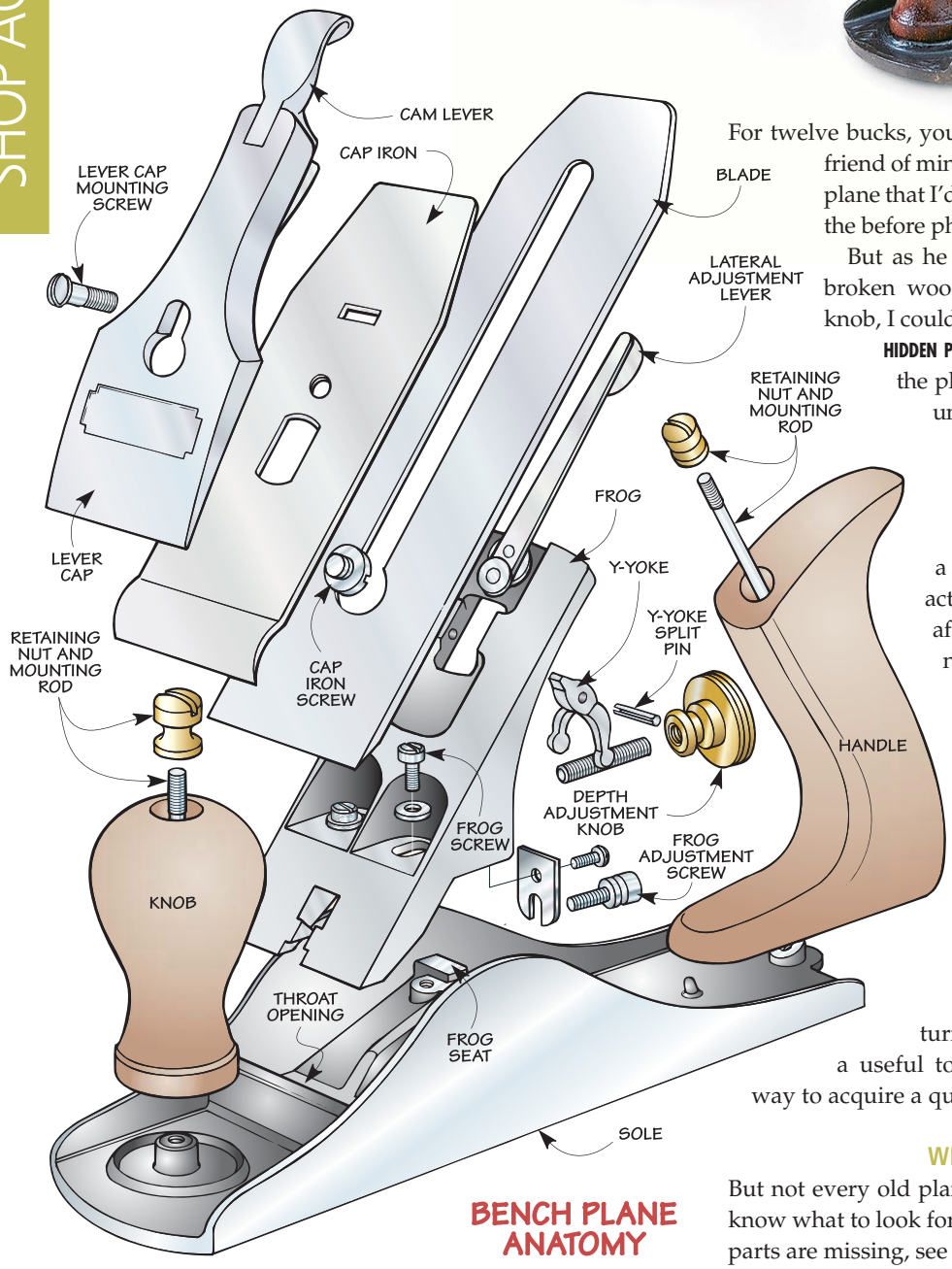


BENCH PLANE ANATOMY

For twelve bucks, you can't go wrong. That's what I told a friend of mine as I showed him the old, rusty bench plane that I'd bought at an auction. (It's the plane in the before photo that's shown up above.)

But as he surveyed the black, gritty metal, the broken wood handle, and the chip in the front knob, I could tell he wasn't so sure.

**HIDDEN POTENTIAL.** In spite of that, I still believed the plane had a lot of potential. Somewhere underneath that rough exterior, there was a precision hand tool. And all it required was a little elbow grease and some patience to bring it out.

**SNEAK PREVIEW.** By the way, if you'd like a "sneak preview" of how the plane actually turned out, take a look at the after photo up above. It's hard to recognize, but it's the same plane. Only I've cleaned it up, made a new handle and front knob, and then tuned it up a bit. (The next few pages are devoted to the methods to do this, so I won't go into them here.)

**WHY RESTORE?** Okay, but this sounds like a lot of work. So why go to the trouble of restoring an old plane? Why not just buy a new plane? There are two reasons. First of all, there's a lot of satisfaction in turning an old neglected plane back into a useful tool. And second, it's an inexpensive way to acquire a quality hand tool.

## WHAT TO LOOK FOR

But not every old plane is worth restoring. So how do you know what to look for? First of all, check to see if any of the parts are missing, see drawing at left. Although it's possible

**Mineral Spirits Bath.** To loosen rust and grime, soak the metal parts of the plane in mineral spirits. Then scrub each part clean with a brush and set it aside to dry.

to buy replacement parts, the cost can start to add up quickly.

**CHECK FOR DAMAGE.** Another thing to check is whether any of the parts are damaged. Some damage (like the handle and front knob on my plane) is easy to repair. Other things are more difficult (or impossible to fix). For example, I'd steer clear of a plane with a cracked or chipped casting, especially around the mouth of the plane.

**WHAT ABOUT RUST?** Rust on the surface is fairly easy to take care of as shown in the box below. The problem is you can't always tell how deep the rust really goes. I found this out the hard way.

The rust on the back of my blade was pretty thick. But I took a chance that it wasn't as bad as it looked. When it came time to sharpen the blade, I noticed some deep pits on the back side, see photo at right. With that much pitting I knew it was going to be impossible to get a sharp cutting edge. So bought a replacement blade for $12.50.

## DISASSEMBLING THE PLANE

All in all, this plane looked like it was in pretty good shape. So I headed into the shop and began taking it apart.

**CAM LEVER & BLADE ASSEMBLY.** It doesn't take much to disassemble a bench plane. Start by flipping up the cam lever and removing the lever cap, see drawing on previous page. Then remove the cap iron and blade assembly. (They're held together with a screw.)

**FROG.** This gives you a good look at the frog underneath. I know, it's an unusual name. But it plays an important part in how well the plane works.

The frog is an adjustable platform that holds the blade at an angle. To adjust the frog, you simply loosen a pair of screws that rest in recesses in the top of the frog. (I had to clean cobwebs out of mine.) Once the screws are loose, the frog will slide back and forth.

**Pitting.** Heavy pitting on the back side of the blade makes it impossible to get a sharp cutting edge.

**BLADE ADJUSTMENT.** Adjusting the frog was easy. Turning the knob to adjust the depth of cut was a different story. The shaft it spins on was covered with grime, so the knob barely budged when I tried to turn it. Instead of fighting to get it off, I decided it was time to remove the dirt and grime by giving the plane a "bath."

**MINERAL SPIRITS.** To do this, pour some mineral spirits in a small plastic tub, see photo above. Then after removing the wood knob and handle (don't forget to save the mounting rods and nuts), soak the metal parts of the plane in the tub for about a half an hour. To remove the loose grime and rust, scrub the parts with an old toothbrush. Finally, wipe each part off with an old rag and set them aside to dry.

# Dealing with Rust

Good, old-fashioned elbow grease will remove most rust. But there are a few "tools" you can use to make the job easier.

The sole of my plane was covered with rust and white paint (probably from planing storm windows). The best way to remove this is with sandpaper attached to a flat surface, see left photo below. But sandpaper doesn't work well in all areas.

A quick way to remove rust from hard to reach areas is with a grinder and a wire wheel, see center photo. And if you want to simply "erase" the rust, you can use a rubber block embedded with bits of silicon carbide, see right photo. (See page 98 for sources of sanding blocks.)

**Sandpaper.** For removing heavy rust from large, flat surfaces, attach sandpaper to a piece of plate glass.

**Wire Wheel.** A wire wheel on a grinder makes quick work of removing rust in hard to reach areas.

**Sanding Blocks.** Removing minor rust is simply a matter of "erasing" it with silicon-carbide sanding blocks.

# the Handle

My bench plane wasn't much different than a lot of old planes I've seen — the curved tip on the upper part of the handle was broken. So I made a new one from a block of mahogany I'd been saving, see photo below.

**PATTERN.** But before getting started, I found it helpful to make a pattern. Attaching the pattern to the block will make it easy to cut the handle to shape later, see Step 1 below. But it also helps orient the block when drilling the holes for the mounting rod that holds the handle in place, see Steps 2 and 3.

**Handle.** All it takes to make a new handle for your plane is a scrap block of wood and a few simple steps.

**TRIM BLOCK.** But you can't drill all the holes just yet. To fit the handle onto the metal body of the plane, you'll need to first trim the block at an angle, see Step 4. Save the wedge that's trimmed off. It makes a handy support when drilling the holes in the base of the handle, see Step 5.

**SHAPE HANDLE.** Now it's just a matter of cutting the handle to shape (Step 6) and using a rasp to create a comfortable grip, see Step 7.

**FINAL DETAILS.** After applying a dye stain to the handle (see margin photo on the next page), I sprayed on four coats of spray lacquer and installed the handle, see Step 8.

## PATTERN FOR HANDLE
(½" x ½" GRID SHOWN)

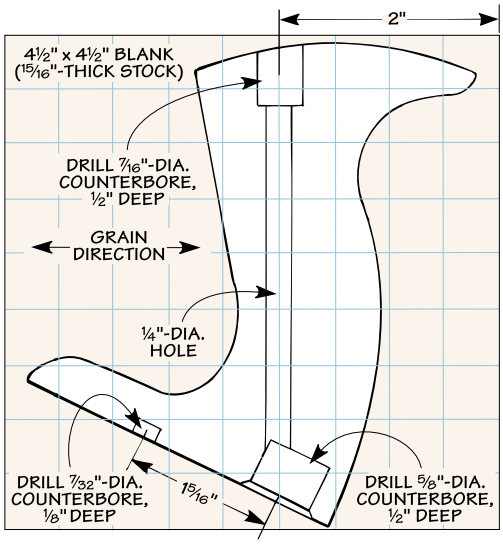


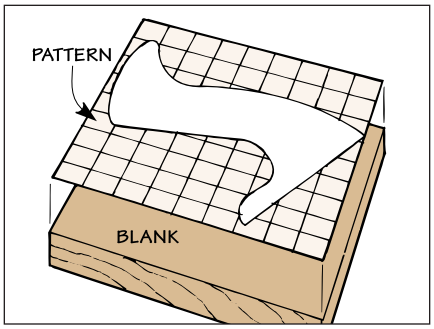


**1** Align the bottom of the pattern with the edge of the blank and securely attach it with spray adhesive.

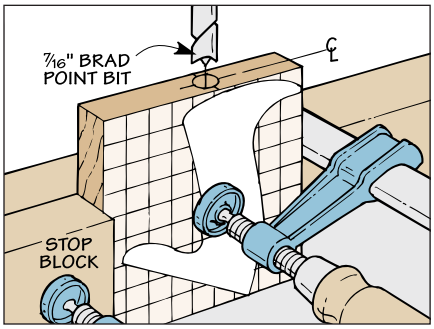


**2** Now drill a counterbored shank hole to accept a retaining nut and mounting rod for the handle.

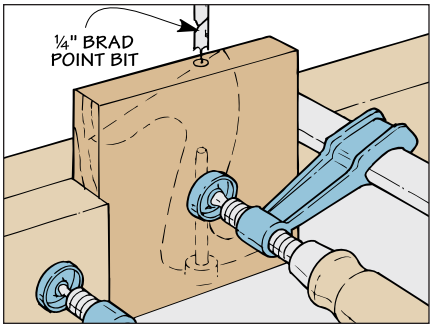


**3** To complete the shank hole, flip the workpiece around and then drill the rest of the way through.

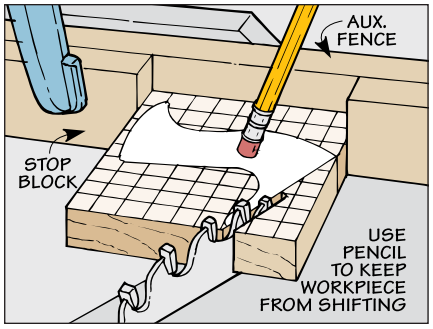


**4** Trimming a small wedge off the corner of the workpiece establishes the base of the handle.

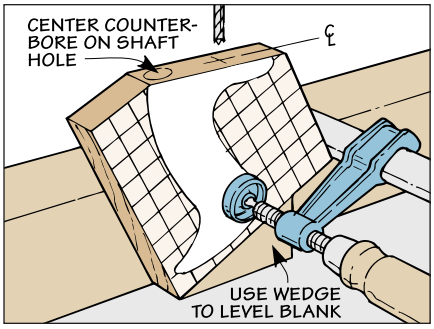


**5** Using the wedge as a support, drill two holes to fit the base of the handle on the body of the plane.

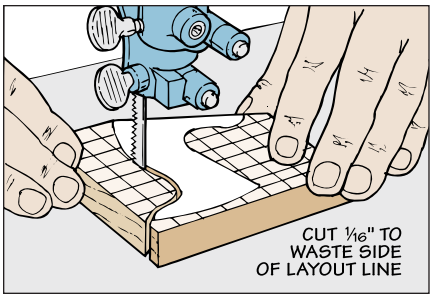


**6** With all the holes completed, a band saw makes quick work of cutting the handle to rough shape.

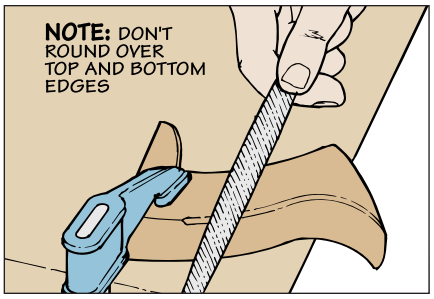


**7** To provide a comfortable grip, round the edges with a rasp and sand the handle smooth.

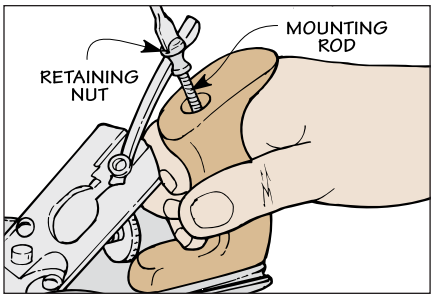


**8** After applying a dye stain and finish, secure the handle with the original mounting rod and nut.

# the Knob

Although the front knob on my plane was still usable, there was a chip at the base that looked like a kid missing a front tooth. So I decided to turn a new knob on the lathe.

**TURNING BLANK.** Once again, digging through my scrap pieces turned up an ideal turning blank. And I cut it to length to match the height of the knob, squaring up the ends in the process.

**DRILL HOLES.** To fit the knob over the metal boss on the body of the plane, there's a counterbore in the end of the blank, see Step 1.

Later, after the knob is turned to shape, the centerpoint of this hole becomes important. It has to align with a hole that accepts a mounting rod for the knob. But there's a catch.

If you drill the hole for the rod now, you can't mount the blank on the lathe. (It's too large to fit on the tailstock without wobbling.)

**MOUNT BLANK.** The solution is to drill a small (⅛"-dia.) hole that fits in the tailstock, see Step 2 below . That takes care of one end of the blank. But how do you secure the other end? To do this, I used a simple trick.

The idea is to screw a scrap block to a faceplate, see detail 'a' in Step 2. Then, after mounting the faceplate to the lathe, turn a short tenon in the scrap. The goal is to get the tenon to fit snug in the counterbore on the end of the blank.

**TURN KNOB TO SHAPE.** Once the blank is securely mounted on the lathe, it's just a matter of turning the knob to shape, see Step 3 and the pattern at left.

**MOUNTING HOLES.** After sanding the knob smooth, the next step is to drill a counterbored shank hole to accept the mounting rod. (This is the hole I mentioned earlier — the one that needs to align with the counterbore in the bottom of the knob.)

An easy way to accomplish this is to clamp a scrap to the drill press and drill a hole to match the size of the counterbore. Then fit a dowel in the hole to use as a centering pin. Setting the knob over the dowel ensures proper alignment as you drill the holes, see Step 4.

**INSTALL KNOB.** Now it's just a matter of applying a dye stain (and finish) and installing the knob, see Step 5.

**Knob.** Making a new front knob to replace a damaged one is easy. Just turn a scrap block to shape on the lathe.

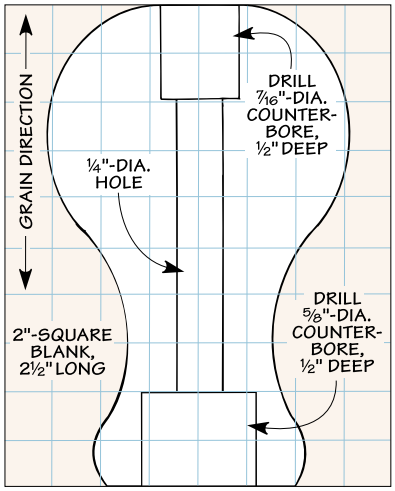


PATTERN FOR KNOB
(¼" x ¼" GRID SHOWN)

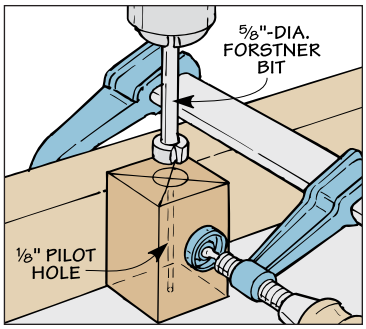


**1** After drilling a shallow counterbore, drill a small pilot hole through the turning blank.

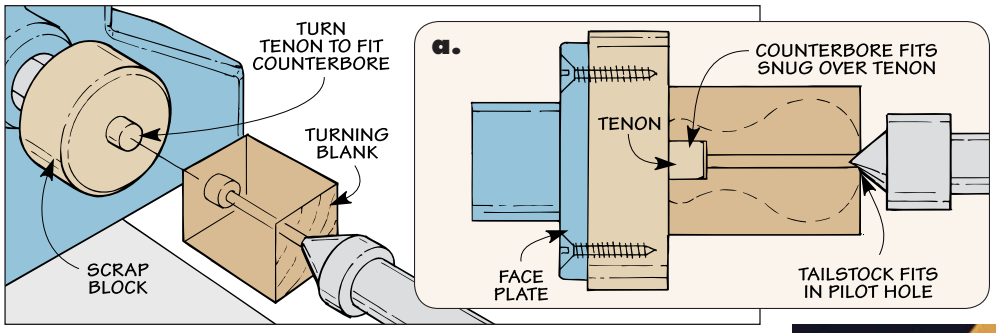


**2** Turning a small tenon on a scrap attached to the face plate of the lathe supports one end of the blank. To support the opposite end, the center of the tail stock fits into the pilot hole.

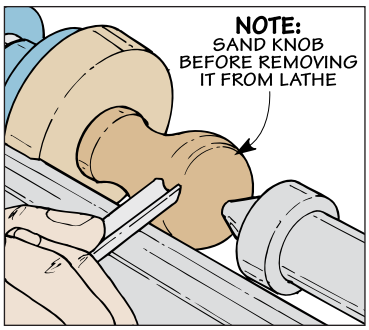


**3** Using the pattern as a guide, turn the blank to final shape with a spindle gouge.

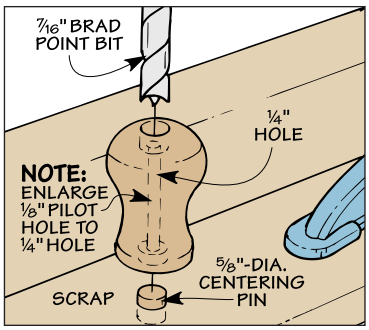


**4** With the knob centered, drill the counterbore for the nut and enlarge the shaft hole.

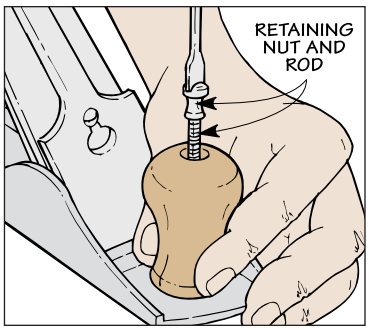


**5** After staining and finishing the knob, screw the knob in place on the front of the plane.

**Finish.** Brushing on an aniline dye (Cuban red mahogany) creates a traditional dark-colored handle.

# saw blade Filing Jig

Sharpening a fine saw blade may seem like a challenging task. But, this shop-made filing jig makes it easy.

**Consistent Results.** Here you can see the consistent results you'll get by using the filing jig. The end result — quick, clean cuts for most tasks.

Cutting a large steel blank into the shape of a blade is the easy part. The biggest challenge in making a back saw is coming up with a way to file evenly spaced teeth with a consistent angle and depth.

The answer lies in a jig that not only helps keep a file square, but uses a threaded rod to guarantee even spacing simply by turning the handle. The best part is the jig takes all the guesswork out of adding teeth to a brand new saw blade. It's pretty simple to build and using it is even easier.

It's designed to create rip-style teeth with a negative 5° rake (inset photo). The teeth have just a small amount of set and there are 13 teeth per inch (TPI). This provides a good balance between quick cuts and smooth results. Of course, it still takes a little elbow grease to file all the teeth, but it's worth the effort.

**FILING JIG.** The most important part of the filing jig is the adjustment mechanism that allows you to accurately position a file to cut the teeth. The heart of this mechanism is the threaded rod, the crank handle, and a square nut. Essentially, these parts ensure that a single full crank of the handle repositions the guide assembly you'll add later to file perfectly spaced teeth on the blade.

**BUILD THE BASE.** Building the jig is pretty simple. It's made from plywood and a few pieces of hardwood. It has three main sections — a base assembly, a guide assembly, and a simple file block.

The main part of the base is made up of a plywood face and two ends. A hardwood blade support and pinch bar clamp the blade in place and position it for filing.

After cutting the parts to size, lay out and drill the holes for the support and pinch bar hardware (Figure 1). You'll also need to drill a stopped hole for a dowel that acts as a positioning pin.

If you take a look at Figures 1 and 2, you'll see that the ends are attached to the face with grooves and a few woodscrews. Before you attach the ends though, you'll want to carefully lay out and drill a hole in each one for a threaded rod.

With all the holes drilled and the sides attached, you can turn your attention to adding the guide assembly and hardware, including the threaded rod (Figure 2).

**GUIDE ASSEMBLY.** The guide assembly has three parts — a traveler that fits down over the rod and a square nut, and two separate platforms that rest on the top edge of the base. Deep rabbets on one edge of each platform create a "channel" to hold the file block in position for sharpening.

I made the platforms from a single, oversized blank, cutting the rabbet first.

**1 FIGURE**

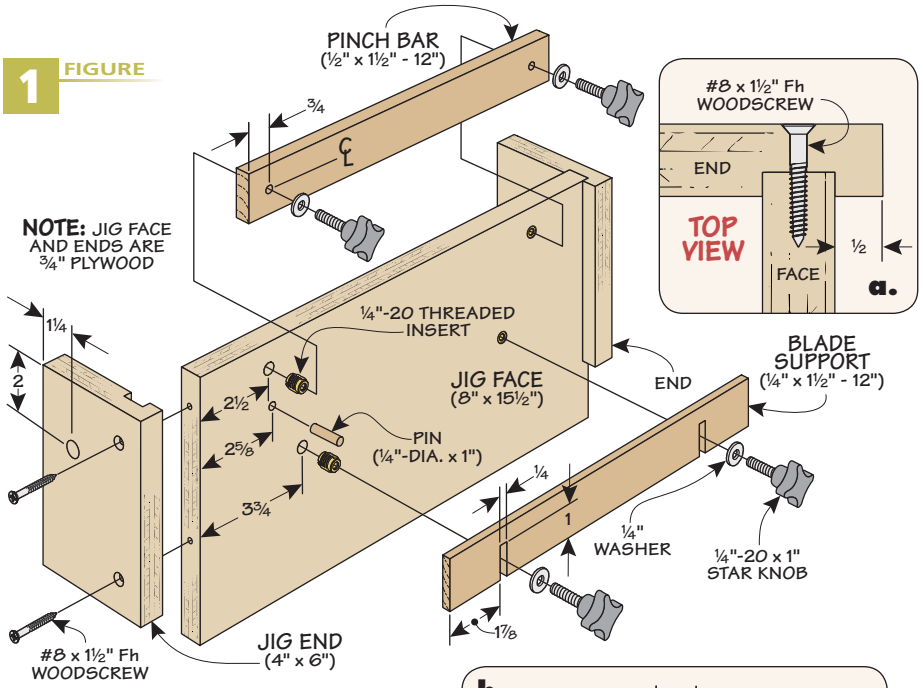


Then I cut a couple of dadoes before trimming them to size, as shown in Figure 2a. Now you can drill the countersunk holes for attaching the traveler in place.

To make the traveler, start with an extra-long blank and cut a deep groove along one edge. After cutting the traveler to size, you can cut the notches in the top and bottom edges (Figures 2a and 2b). To complete the guide assembly, go ahead and screw the traveler to the platforms. All that's left to complete the filing jig is to make a block to hold the file.

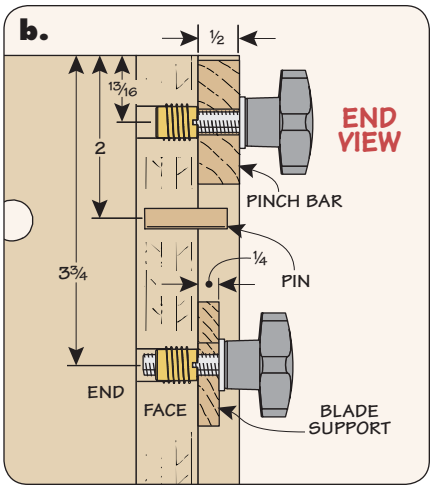


**2 FIGURE**

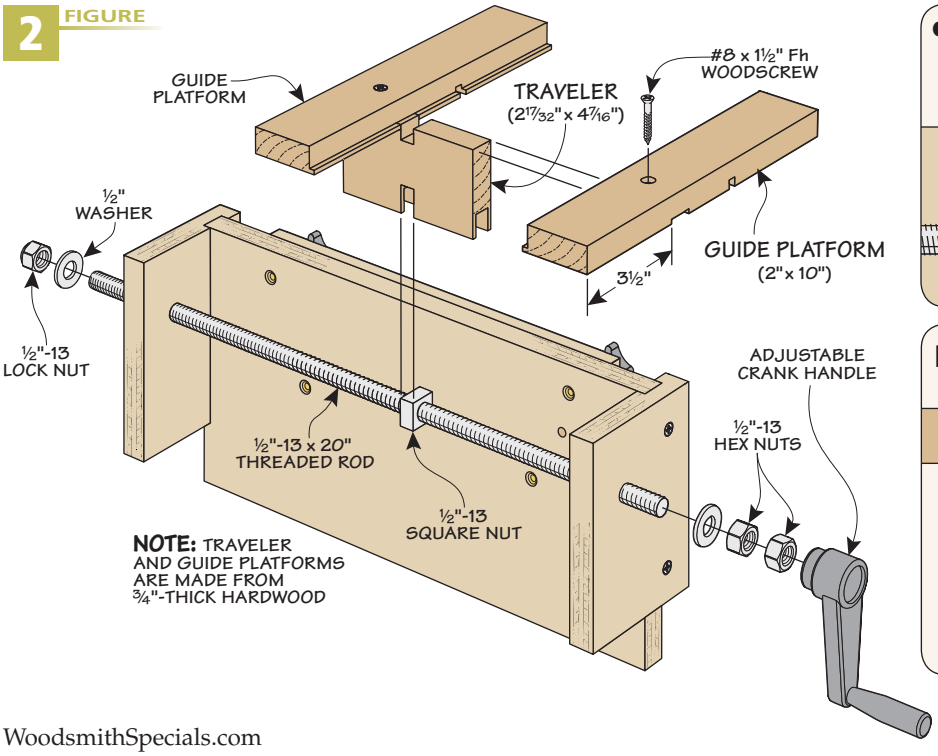


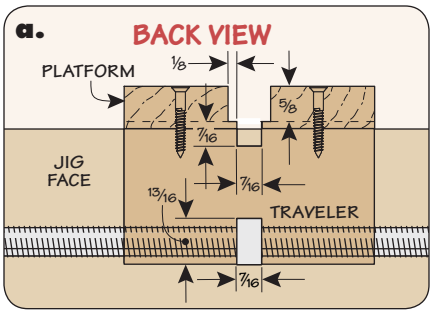


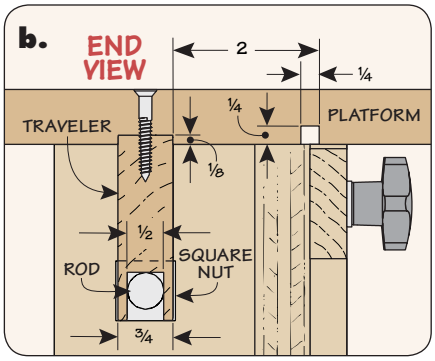

# making & using the File Block

Now that you have the main parts of the filing jig completed, you can get started on the block that holds the file. The block is just a piece of hardwood with a groove cut in one edge to hold a file. You'll find sources for the file on page 98. The file block is a simple design, but it's important to position the file accurately in the bottom edge of the file block.

**MAKE THE BLOCK.** As I mentioned earlier, the teeth on my blade have a negative 5° rake angle. That means to cut the teeth, the cutting edge of the file needs to match that angle. And to make building and using the jig as simple as possible, the file block has to ride perpendicular to the guide assembly. Finally, the guide also has to sit square to the blade to file rip-style teeth.

What all this means is the cutting edge of the file needs to be held exactly 5° off vertical in order to cut the teeth — not an easy thing to do by hand with such a small file. But don't worry, all the information you need to create the file block is illustrated in Figures 3 and 3a. It's just a matter of cutting a small "V-shaped" groove in the block.

Once you have the block sized and the groove cut, you can shape the top so it's comfortable in your hand (Figure 3). A band saw works well to miter the corner and I sanded a roundover on the top edges. Finally, attach the file to the block with screws (photo at right).

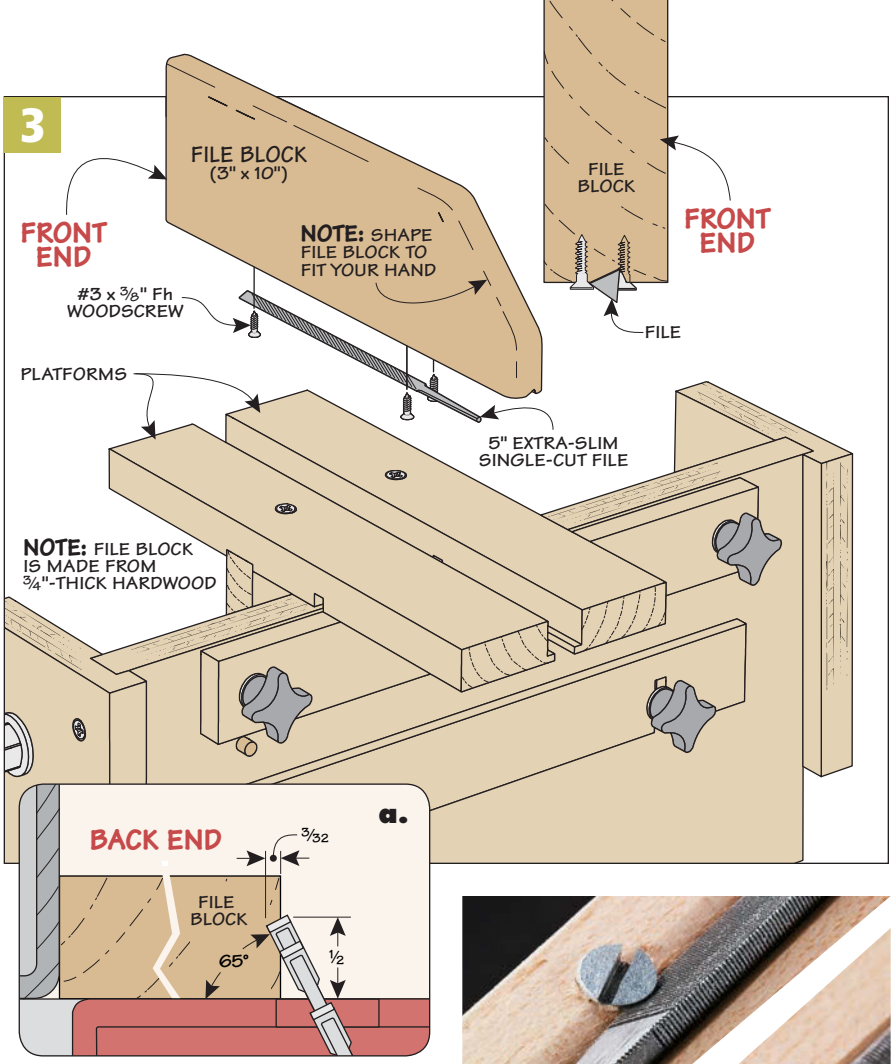

**Attach File.** Position the screws to trap both ends of the triangular file to hold it securely in place on the block.

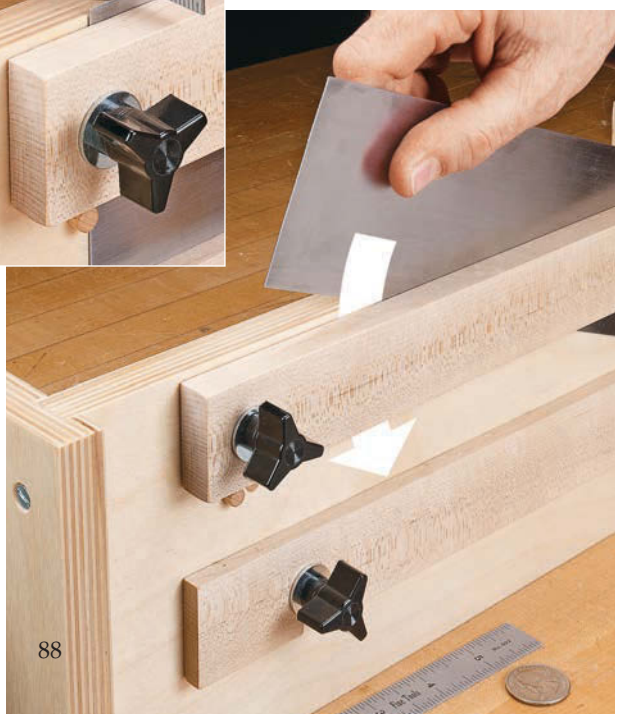

**Adjust Blade Height.** Place blade behind pinch bar and against pin. Use a quarter to set the blade to the correct height.

## USING THE JIG

You'll find that the jig is easy to use. There's one thing to remember though before you get started. The file only cuts on the push stroke. So you don't want to pull the file back across the blade. If you do, the file will dull more quickly, which makes filing more difficult than it has to be. Just remember to lift the block up slightly on the back stroke as you work.

**MOUNT THE BLADE.** Start by clamping the jig in your bench vise and mount the blade in the jig. The photo at left shows you how to do this. Just be sure to slide the "square" edge of the blade tight against the positioning pin.

Before you tighten down the pinch bar, you need to raise the blade to the correct height above the top edge of the base. An easy way to do this is to use a quarter as a gauge (inset photo at left). Just remember, this is just a starting point. You may need to make minor

**Guide Assembly.** Position the traveler nut to the far left. Then place the guide assembly over the threaded rod and nut.

**File The Teeth.** Forming a tooth to the exact depth should take about four strokes. Always file on the push stroke.

## Just Right Depth

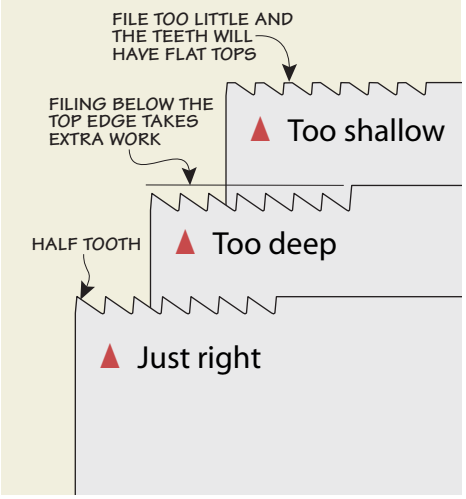


adjustments once you begin cutting the teeth on the metal.

**GET IT "JUST RIGHT."** You'll start sharpening at the far left end of the jig and work your way to the right. So you need to move the traveler nut most of the way to the left. Once you have the nut close, place the guide assembly over the blade with the notch slipped over the nut (left photo above).

The goal is to position the nut so that your first cut leaves a single half tooth (lower drawing in the margin at right). A full turn of the handle advances the nut the exact distance to file the next tooth, so position the handle straight down to make it easier to know when you've made a full turn. Now you can start cutting the teeth. Use steady passes with downward pressure.

**FILE THE TEETH.** Once you start filing, it's important to check your progress often. As long as the blade is raised above the base the correct height, it only takes about four strokes to cut a tooth. Once the first tooth is cut, turn the handle one full turn (left photo below).

After you file the second tooth, you'll be able to gauge whether you need to adjust the height of the blade. If your teeth look like the top drawing in the margin, your blank is too low and you'll need to raise it. If the tops of the teeth are below the top edge, your blank is too high (middle drawing). You'll know you have it right when it looks like the lower drawing.

Continue filing until you've cut all the teeth. To make best use of the file, rotate it in the block a third of the way along. And then rotate it one more time for the last third.

At this point, the blade is complete, except for setting the teeth. For more on this, see the box below. All that's left is to go to page 6 to finish building the handle.

**Perfect Spacing.** One full turn of the crank handle moves the traveler the exact distance for creating the next tooth.

## Setting the Teeth

The final step is to "set" the teeth to keep the blade from binding. To do this, you can use a saw set to bend every other tooth slightly in one direction. Instead of investing in a saw set, I came up with a quick and easy solution. And that's to use a large dowel as a mallet and bend the teeth with a nail set. You'll need to grind the dimple on the nail set to a dull point.

These are fine teeth, so it can be tough to keep track of which tooth to set next. To make it easier, I placed a piece of masking tape along the blade and marked every other tooth (photo and inset at right). All it takes is a light tap with the mallet to get the set you need.

**Setting the Teeth.** To set each tooth identically, let the dowel "drop" onto the nail set. A piece of hardboard provides support underneath the blade.

# tri-fold Drill Bit Index

**Compact & Portable.** Folding the drill index turns it into a compact package that's easy to store on a shelf.

## Store your most-used drill bits in style with this modern take on a classic storage device.

A few of us around the *Woodsmith* shop have a fondness for antique tools. There's a certain charm about the styling and utility of these old-time classics. When one of our editors brought in an antique drill bit index, it inspired the design for the one shown above.

The triangular index provides a stable platform for your most commonly used bits during use. For storage, the index folds up into a compact unit, as shown in the photo at left. The three sides pivot on pins made from brass rods. Each side of the index is unique in shape so that all three sides nest together when collapsed. The two free ends butt together when expanded.

**NOTES ABOUT CONSTRUCTION.** Building this project isn't difficult, but its construction techniques may not be what you're used to. This project relies heavily on patterns to shape each of the parts and locate key features like the holes for the pins that hold everything together.

Each side consists of two identical cap pieces and a core. I used walnut for the

caps and padauk for the core. Using the patterns below, you'll get a head start on laying out the blanks.

**MAKING THE PATTERNS.** But before you get too far, there's a tip I want to point out. I used thin sheets of flexible, high-impact polystyrene (HIPS) to make the patterns (refer to Sources on page 98).

HIPS is easy to draw on with a pencil or fine-point permanent marker. It also cuts easily with a knife or scissors. Since you'll be applying and removing the patterns often as you shape and assemble the parts, HIPS is durable enough to withstand the repeated use.

To start, make enlarged copies of the patterns below or download full-size patterns from *WoodsmithSpecials.com*. After roughly cutting out the paper patterns, attach them to the plastic with contact adhesive. Carefully cut out the plastic patterns, using a straightedge for the long edges.

To lay out the shaded radiused areas on the patterns and mark their centerpoints, I used a Forstner bit sized for each diameter shown on the pattern. Simply press the centerpoint of the bit into the plastic and rotate the bit by hand to dimple the centerpoint. This provides a handy reference later when it comes time to drill out the waste and hinge holes.

**Make Patterns.** High-impact polystyrene (HIPS) makes an ideal material for patterns. It's durable and cuts easily with a knife or scissors.

**Apply.** Use double-sided tape to attach the plastic patterns to the blanks. The patterns can be easily removed and reattached as needed.

## How-To: Lay Out the Patterns

**PATTERN ONE**
(ONE SQUARE = ¼")

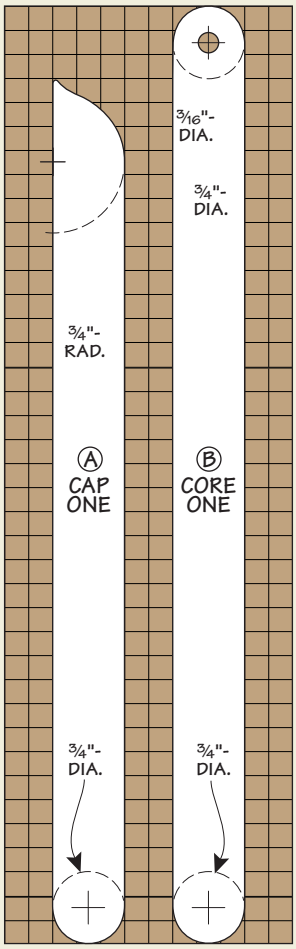


*NOTE: Enlarge patterns 200%. The highlighted areas (tan circles) are removed when drilling out waste for final shaping of part.*

GO 2 Online Extras

For full-size patterns for the Drill Bit Index, go to: WoodsmithSpecials.com

**PATTERN TWO** (ONE SQUARE = ¼")

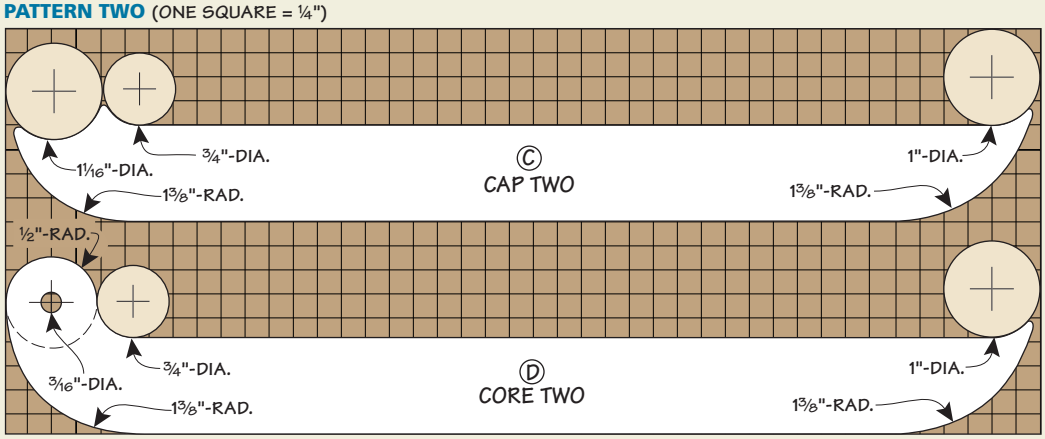


**PATTERN THREE** (ONE SQUARE = ¼")

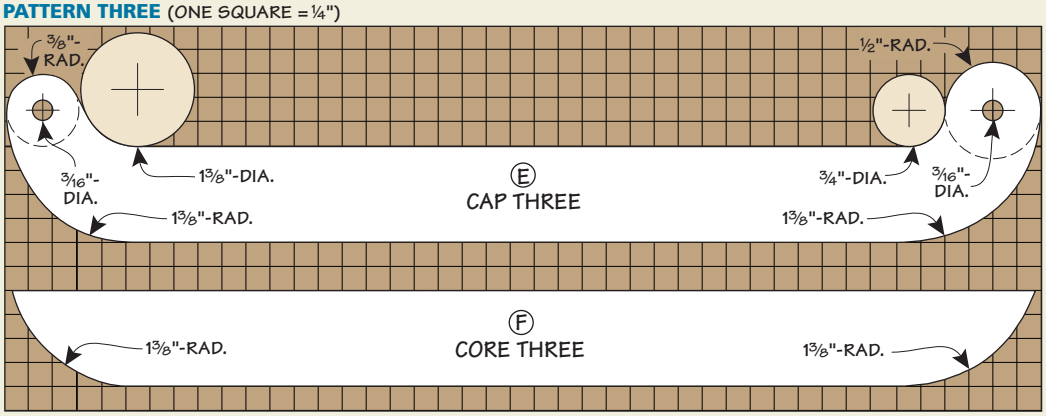

# getting Started

Once you have the patterns in hand, you can start to work on making the parts. You'll construct one side at a time, each with two caps and a core.

**PREPARING THE BLANKS.** For each of the three sides of the drill index, you'll prepare two blanks: One for the core and another for the caps. After you've completed the shaping of the cap blank, you'll rip it in two to create the top and bottom caps.

When preparing your blanks, it's a good idea to square up the edges and faces. Having square reference edges and smooth faces makes the shaping and assembly process easier. I used double-sided tape to fasten the patterns to the blanks. When you do this, make sure to mark the centerpoints of all the radii using an awl. You'll reference these points when reinstalling the patterns during the shaping process. These centerpoints also mark where you need to drill during and after assembly to complete the curved shapes and prepare for installing the hinge pins.

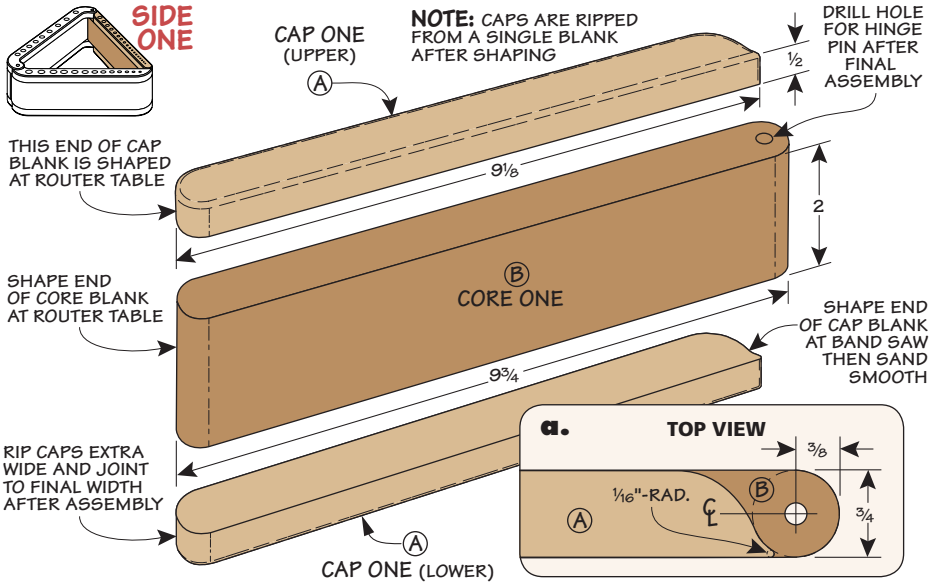


## SIDE ONE

The illustrations above and below guide you through the process of making the first of the three sides of the drill index I started by cutting the core blank to size. Use the pattern to locate the centerpoint for the hinge pin and mark it, but don't drill it yet. Then round over both ends at the router table, as shown in Figure 1.

**CAP BLANK.** The blank that forms the two caps starts out in a similar fashion. Except you'll leave it a little wide to account for the saw kerf when ripping the blank to create the two caps. Joint the edges and faces square, as before. Using the pattern as a guide, trace the shape on the edge of the blank. One end is rounded over at the router table. The opposite end is shaped at the band saw, as in Figure 2. I used an oscillating spindle sander to smooth the curves. You could also use a small-diameter sanding drum chucked in the drill press.

Once the shaping is done, rip the cap blank in two to form each of the caps (Figure 3). After sanding to remove the saw marks, you're ready for glueup.

**CLAMPING SETUP.** The clamping setup I used is shown in Figure 4. I took advantage of the face vise and bench dogs on my bench. A pair of cauls between the dogs traps the workpieces and spreads the clamping pressure.

The key to the glueup is to make sure the rounded end of each of the three pieces is flush. That's where the cleat comes in. The cleat is clamped square to the cauls. Butt the pieces against the cleat and tighten the vise to clamp the pieces.

Joint the faces and edges smooth and set the assembly aside for now. You'll do

## How-To: Shape & Assemble Side One

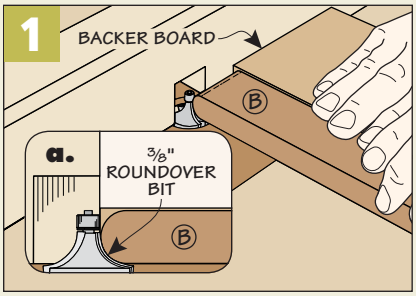


**Shaping the Blanks.** Round over both ends of the core and one end of the cap blank at the router table.

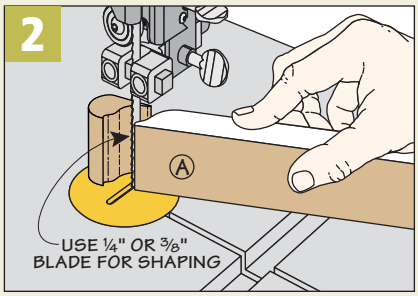


**Band Saw Caps.** Attach the pattern to the caps blank to mark and cut the profile on the end at the band saw.

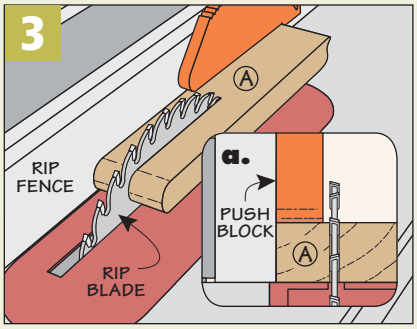


**Creating the Caps.** Rip the blank in two, leaving the caps extra wide. Sand or plane the caps to final thickness.

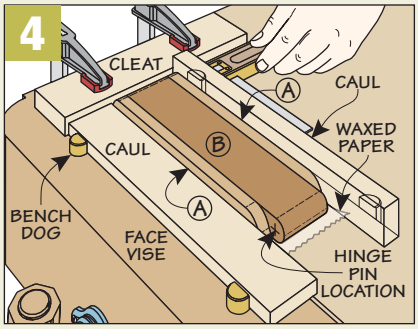


**Glue & Clamp.** To keep all three parts aligned and square during glueup, use the vise with a pair of cauls and a cleat.

the final shaping of the assembly after all of the sides are complete.

## SIDE TWO

The second side of the drill index requires a little more shaping, but otherwise the construction process is pretty similar. The drawings on this page will guide you, and I'll highlight the important steps.

**CAP BLANK.** As illustrated at right, the caps for side two are a little more involved than for side one. In Figure 1 below, you can see how I used the centerpoints on the patterns as a guide to drill out the inside radii at each end using Forstner bits. These become reference points for marking the core blank. I cut away the bulk of the waste at the band saw, as illustrated in Figure 1.

**CORE BLANK.** As also shown at right, the core blank for side two is thicker. This is to account for the hinge knuckle at one end. At the opposite end, a cove mimics the cove on the end of the caps.

Use the cap blank as a guide to mark and drill the radii on the core blank, as in Figure 2. (You'll drill the hinge hole after all the sides are assembled.) I used double-sided tape to attach the cap blank to the core blank. Then drill through the core blank using the cap blank as a guide (Figure 3). After removing the cap blank, rough out the shape of the core and sand it smooth, as shown in Figure 4.

Rip the caps in two and use a dowel to align the parts, as you can see in Figure 5. Then remove the waste on the upper and lower caps at the band saw (Figure 6).

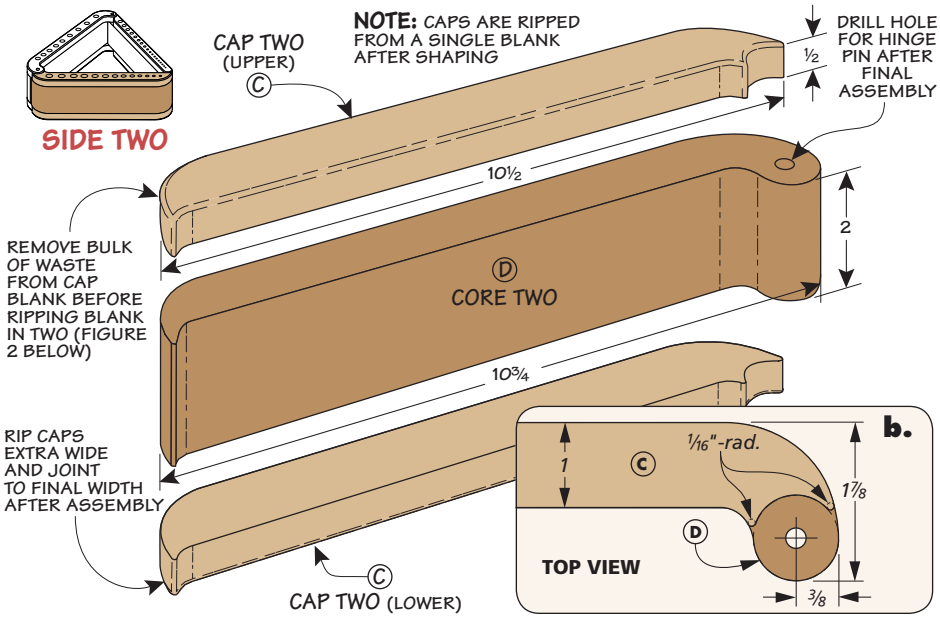


# How-To: Shape & Assemble Side Two

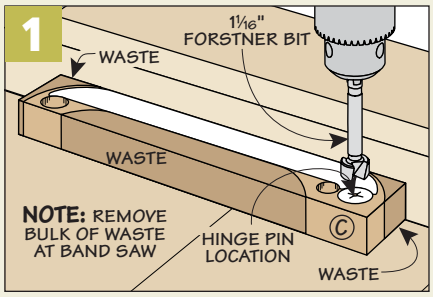


**Mark & Drill.** Use the pattern to mark and drill the inside radii, then remove most of the waste at the band saw.

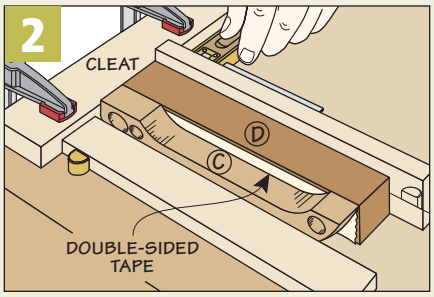


**Alignment.** Apply double-sided tape to the core blank and use a cleat to align the two blanks while clamping.

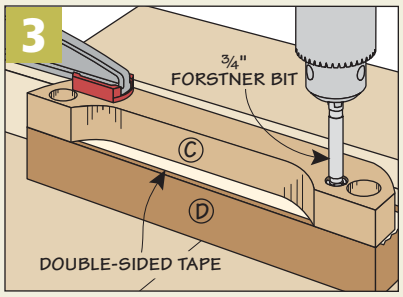


**Drill Guide.** Use the cap blank as a guide to drill the inside radii of the core blank at the drill press.

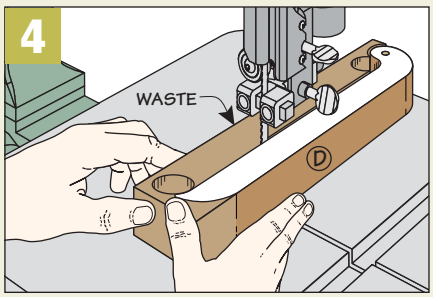


**Cut to Shape.** Attach the pattern to the core blank to serve as a guide to remove the waste at the band saw.

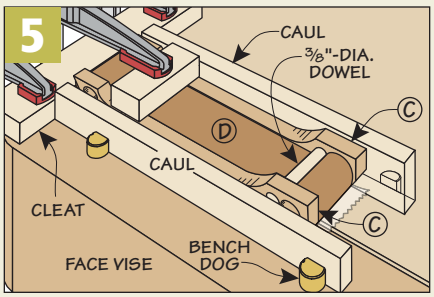


**Gluing & Alignment.** A dowel helps align the parts while clamping them using the clamping jig on the benchtop.

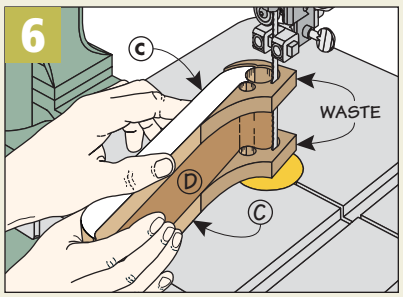


**Final Shaping.** After the assembly is dry, remove the remainder of the waste at the band saw and sand smooth.

# final Details

With two sides roughed out and glued up, you're ready to move onto the third side. Then you'll concentrate on the fit and finish during final assembly.

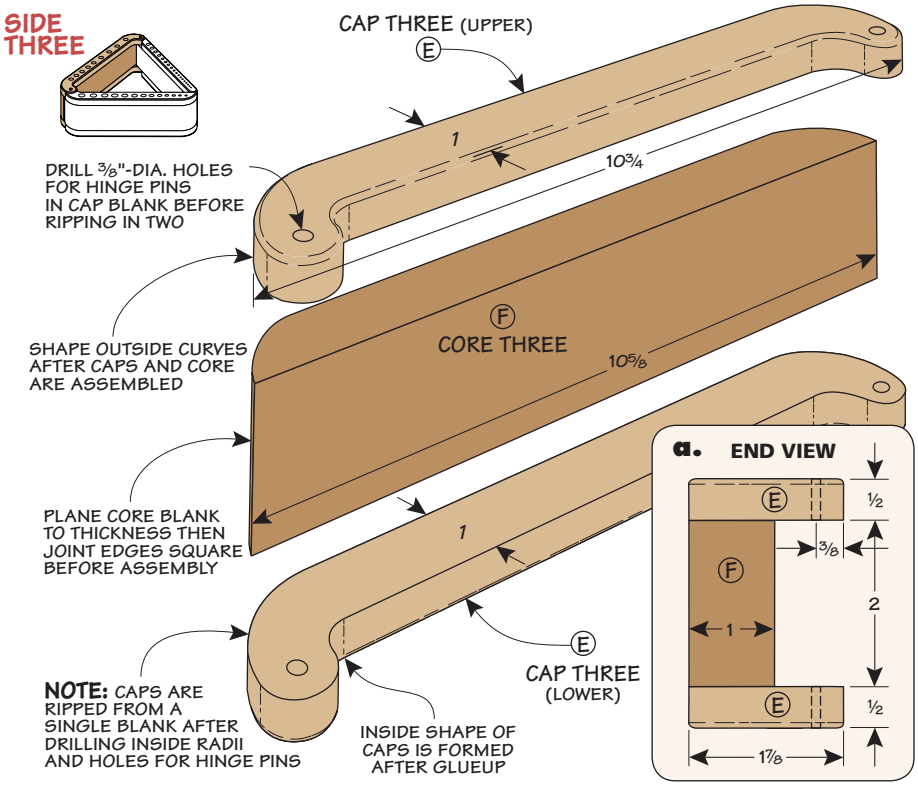


## SIDE THREE

The final side of the drill bit index goes down a familiar road. The most critical part of the process is aligning the holes for the hinge pins during glueup. But I'll talk more about that later.

**SHAPING CAPS.** The shape of the caps for the third side dictate the shape of the core, so I made the caps first. Figure 1 below shows the process of marking the centerpoints of the inside radius cuts and the hinge pin locations. I made the blank wide enough to incorporate the centerpoints to help locate the Forstner bit when drilling (Figure 2). I waited until the caps were glued to the core before removing the waste.

Before ripping the cap blank in two, I drilled the holes for the hinge pins, making sure they were square to the face. The fence on your drill press helps to register the blank for drilling.

**CORE BLANK.** Once you've drilled the holes and ripped the blank to form the two caps, you're almost ready for glueup. But first, you'll need to make the core. It's a rectangular blank cut to size with the edges jointed square. You can even leave the blank a little long since the ends will be removed during the final shaping.

**GLUEUP.** Using the bench vise setup as before, you'll need to ensure that the holes for the hinge pins are aligned. I inserted a piece of brass rod through the caps at each end. After the glue dries, step over to the band saw for the final shaping (Figure 3). Once everything is sanded, you're ready for final assembly.

## FINAL ASSEMBLY DETAILS

The process of assembling the drill index starts by doing some final shaping and smoothing with a sanding belt. I rounded over all of the outside edges of the caps with a ⅛" roundover bit at the router table. The rest of the assembly involves installing the hinge pins and doing the final shaping. The drawings on the next page help guide you along.

**HINGE PINS.** The position of the hinge pins results in a slight gap (about 1/32") between the sides when the index is collapsed for storage. The goal is to align the centerpoints of the hinge pin locations on sides one and two with the holes in the caps on side three. To maintain consistency, I used

# How-To: Shape & Assemble Side Three

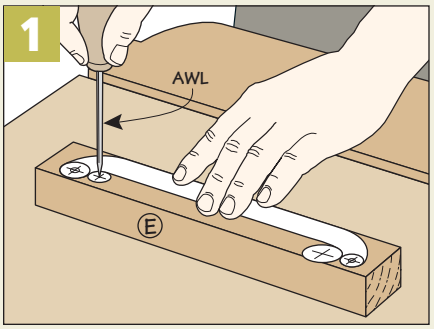


**Marking Centers.** Attach the pattern to the cap blank flush on a jointed edge. Mark the hole centers with an awl.

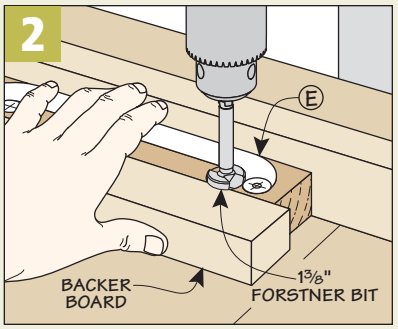


**Drilling.** Drill the inside radii and holes for the hinge pins at the drill press. You'll remove the waste after glueup.

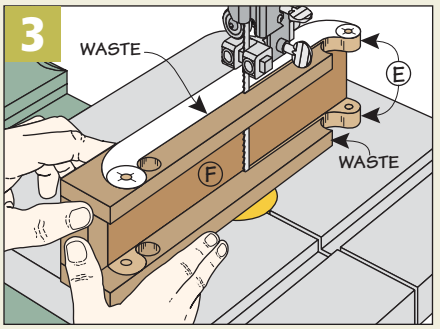


**Cut to Shape.** After the glue dries, cut the waste from the caps and core at the band saw and then sand smooth.

# How-To: Complete the Assembly & Fit the Bits

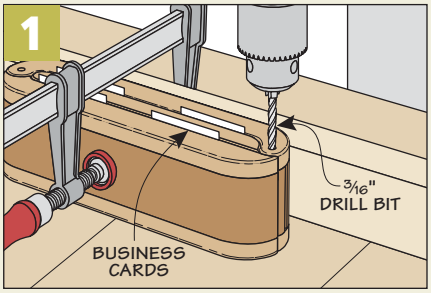


**Card Spacers.** For even gaps when the index is closed, insert business cards as spacers before drilling for hinge pins.

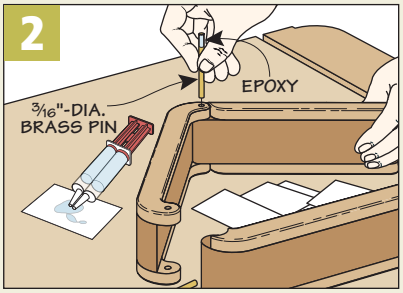


**Hinge Pins.** Assemble the three sides by inserting 3/16"-dia. brass pins in the pivot holes. Use epoxy to secure the pins.

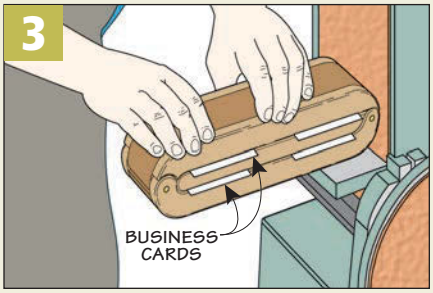


**Final Sanding.** Refine the outside curve of the assembled index at the belt sander then finish with some hand sanding.

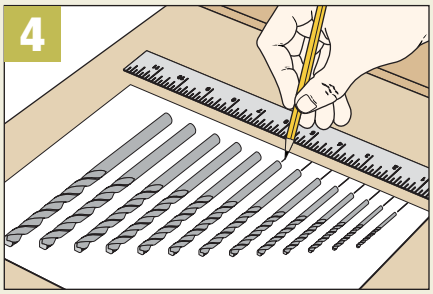


**Drill Bit Layout.** Arrange your drill bits with equal space between each bit and then mark the shank centerpoints.

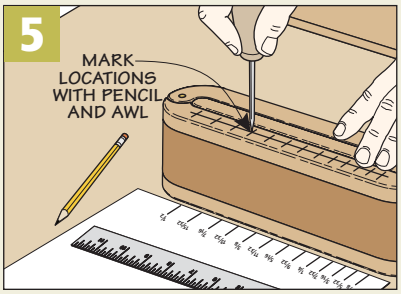


**Hole Locations.** Transfer the marks from your layout to the centerline along the edge of one of the sides of the index.

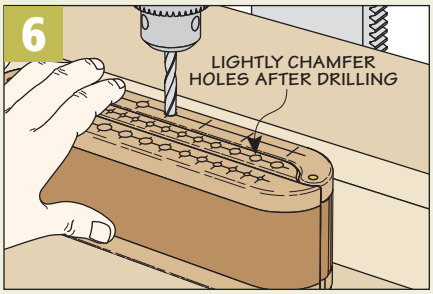


**Drilling.** Use the fence on your drill press to locate and drill oversized holes to accommodate the bits.

a few business cards stacked together as spacers (Figure 1 above).

Once everything is aligned and clamped together, use the holes in the caps on side three as a guide to drill through the other two sides. Cut the brass rod to length before assembling the drill index. Then use epoxy on one end of the hinge pin to secure it (Figure 2).

**FINAL SHAPING.** With the index assembled, I inserted the business card spacers once again. Some careful sanding at the belt sander will smooth the ends of the assembled unit and make a nice transition between the parts (Figure 3). You may need to touch up some of the roundovers on the cap after this step.

A little hand sanding is all you need to prepare the index for a finish. I sanded through 150-grit before wiping on a couple coats of oil finish. I applied the finish before drilling the holes for the drill bits. This way, you avoid having the finish run down into the holes.

**STORING YOUR DRILL BITS.** The idea of making the drill bit index was to have a place to keep your commonly used bits at hand. Figures 4 through 6 above show you how to lay them out to locate the holes you'll need to drill.

Lay the drill bits on a piece of paper or light cardboard and space them as desired. I did this for my sets of brad-point, twist, and spade bits. Mark the centerpoints of the drill bit shafts on the paper to transfer to the edge of the drill index. Scribe a centerline down each edge of the index to keep the holes aligned.

When drilling the holes, I used a bit slightly larger than the shank size (1/64" or 1/32") so the bits would be easier to insert and remove. I drilled the holes 1/2" deep with brad-point bits. That was followed up with a countersink bit to create a slight chamfer and ease the edges.

With this handy drill bit index, using, storing, and keeping your drill bits accessible has never looked so good.

## MATERIALS, SUPPLIES &CUTTING DIAGRAM

| | | | | | |
|---|---|---|---|---|---|
| **A** | Cap One (2) | 1/2 x 3/4 - 9 3/4 | **E** | Cap Three (2) | 1/2 x 1 7/8 - 10 3/4 |
| **B** | Core One (1) | 3/4 x 2 - 9 3/4 | **F** | Core Three (1) | 1 x 2 - 10 3/4 |
| **C** | Cap Two (2) | 1/2 x 1 7/8 - 10 3/4 | | | |
| **D** | Core Two (1) | 1 7/8 x 2 - 10 3/4 | | | |

• (2) 3/16"-Dia. x 3" Brass Rod

1 1/2"x 2"- 36" WALNUT (1 Bd. Ft.)

2"x 2"- 36" PADAUK (1.3 Bd. Ft.)

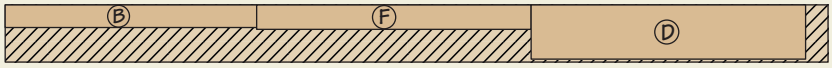

# sharpening a Plane Iron

Learn a great technique for creating a razor-sharp edge on your hand plane irons without using an expensive guide.

There's nothing quite like the glass-smooth surface you get with a sharp hand plane. But doing that requires a razor-sharp edge on your plane iron. The nice thing is it doesn't have to be an involved process. A waterstone and a simple technique are all you need.

**EQUIPMENT.** Before getting started, I want to talk about the equipment you'll need. I use a combination waterstone (main photo). One side is 1000 grit and the other side is much finer at 6000 grit for final honing.

To keep the bench clean, I place the waterstone in an old baking sheet and then set the pan on a non-slip pad on the bench. Finally, you'll need some water to soak the stone and keep it lubricated. I like to use a spray bottle to mist the stone as I'm sharpening.

**THICKER IS BETTER.** The technique I'm going to show you is so fast because you don't use a honing guide. Instead, you'll "feel" the bevel angle as you sharpen. This technique works best on a thicker plane iron. For a thinner blade, you may still want to use a honing guide.

**FILE THE CORNERS.** There's one thing you'll need to do to prepare the iron before you start the process of sharpening. Plane irons tend to dig in and leave "tracks" in the wood if you don't knock off the corners of the iron first. You can see in the

**1000 Grit.** Use the coarse side of the waterstone to remove factory grind marks.

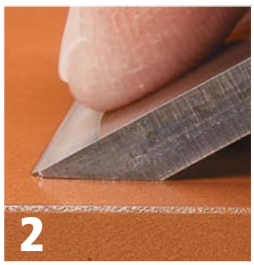

**As Easy as 1, 2, 3.** First knock off corners of the iron with a file (1). Next, "rock" the iron on the stone to "feel" the bevel (2). Use side-to-side motion (left photo) until you get a uniform scratch pattern (3).

photos on the previous page that it just takes a couple of swipes with a file.

And, on a new iron, you may also need to flatten the back near the bevel. I work the last  inch or so on the coarse side to get a consistent scratch pattern. Then you can flip the stone and finish up with the finer grit.

**FEEL THE BEVEL.** For the bevel on a new iron, the goal is to remove the factory grind marks (lower photos, previous page). If the iron just needs a little honing, you can skip to the higher grit as shown above. Just remember to keep the bevel flat on the stone.

I hold the iron on the stone with a finger at each corner and "rock" the iron until I feel the bevel sit flat on the stone. And you'll want to keep the iron at that angle as you sharpen to maintain a flat bevel.

**SIDE-TO-SIDE.** I use a side-to-side motion to sharpen, starting on the coarse grit. For me, this kind of motion helps keep the bevel flat on the stone. This way, I avoid any tendency to change the angle of the iron that could round over the beveled edge and make it dull.

When you achieve a uniform scratch pattern on the bevel, it's time to switch to the finer grit. Using the same technique on the finer side of the stone, you'll work to remove the scratch lines left by the coarse grit. And just like before, you're aiming for an even scratch pattern across the bevel.

**FINAL TOUCHES.** The last step is to create a micro-bevel for the ultimate cutting edge. This is a narrow area at the edge of the iron and serves two purposes. The higher angle makes for a more durable edge. And because it's such a small bevel, it's easier to resharpen as you use the plane.

To create the micro-bevel, you'll use the same sharpening motion. The only difference is you're lifting the back end of the iron just a couple of degrees. A few side-to-side strokes is all it takes to form the micro-bevel, as you can see in the photos above.

**CREATE A CAMBER.** This technique creates a straight, square cutting edge, which is ideal for a miter or block plane. But for a smoothing plane, I like to create a slightly "cambered" edge (see the box at the bottom of the page).

**THE TEST.** The final test of your sharpening skills comes after installing the iron in your plane. If you can make thin, curly shavings, you've done your job. And as you can see, sharpening your plane iron doesn't have to be a difficult, time-consuming affair.

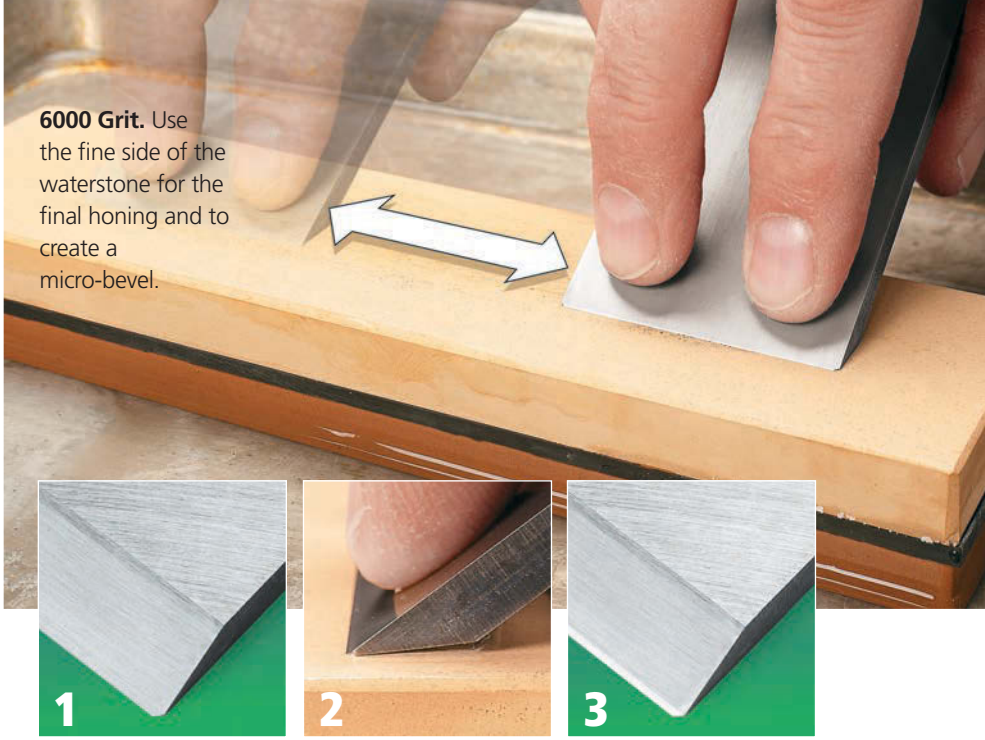


**6000 Grit.** Use the fine side of the waterstone for the final honing and to create a micro-bevel.

**Create a Micro-Bevel.** Use the same technique as before to remove scratch marks left by the coarse stone (1). To create a micro-bevel, feel the bevel as you did earlier, then lift the back end of the iron slightly (2). Take several strokes to create the micro-bevel (3).

## creating a Cambered Edge

Creating a slightly curved cutting edge, or camber, creates a shaving that is thicker in the middle and thinner at the edges. With a smoothing plane, this leaves a super-smooth surface.

**One-Sided.** To create the cambered edge, you'll follow the same sharpening technique as above, with one minor difference. As you sharpen with both the coarse and then the fine grit, you'll alternate pressure from one corner of the iron to the other. It only takes a few strokes on each corner. Be sure to check your progress with a small square (drawings at right). It doesn't take much work. You're only removing about 1/64" on each side. When you can see a sliver of light at the corners of the iron, you're done.

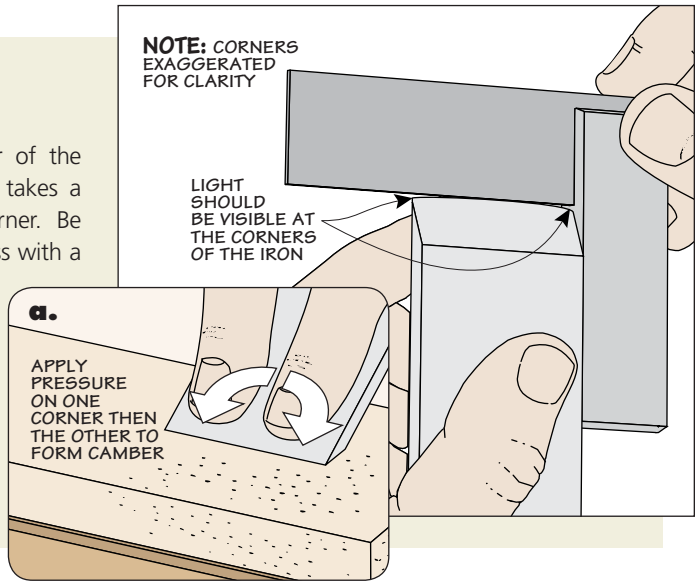

# Must-Have
# Hand Tools Sources

**MAIL ORDER SOURCES**

**amazon.com**

**Essentra Components**
**800-847-0486**
**essentracomponents.com**

**Highland Woodworking**
**800-241-6748**
**highlandwoodworking.com**

**Japan Woodworker**
**800-537-7820**
**japanwoodworker.com**

**Lee Valley**
**800-871-8158**
**leevalley.com**

**Lie-Nielsen**
**800-327-2520**
**lie-nielsen.com**

**McMaster-Carr**
**630-833-0300**
**mcmaster.com**

**Pulsar ProFX**
**850-926-2009**
**pulsarprofx.com**

**Rockler**
**800-279-4441**
**rockler.com**

**Woodcraft**
**800-225-1153**
**woodcraft.com**

Most of the supplies you'll need for projects in this book are available at hardware stores or home centers. For specific products or hard-to-find items, take a look at the sources listed here.

Retailers will periodically discontinue some items, so gather all the hardware that you need before you get started on your project. You can always adjust dimensions or drill different-sized holes to suit your hardware.

### HEIRLOOM BACK SAW (P. 6)

• **McMaster-Carr**
*8" x 24" -.020" Steel*.....9075K243
*¼"-20 Mach. Screws* ...91700A542
*10-32 Knurled Nuts* ....92741A140
*.064" Brass Strip* .....8859K91
*Crank Handle* .....6129K3
*½" -13 Square Nut* .....94785A427
*¼"-20 x 1" Star Knob* ....57715K45
*5" Extra Slim File*.....4229A25

### SCRAPER SHAVES (P. 10)

• **Woodcraft**
*0.80mm Scraper, 6" long* .... 02Z08
• **McMaster-Carr**
*10-32 Knurled Nuts* ....92741A140
*10-32 Mach. Screws* ....92480A837

### INFILL HAND PLANE (P. 16)

• **McMaster-Carr**
*5/32" Steel Bar* .....9517K17
*5/16" Steel Bar* .....9517K28
*5/32"-dia. Steel Rod* .....8893K23
• **Lee Valley**
*1⅞" Plane Iron* ..... 05P62.25
*½" Magnet* .....99K31.03
*½" Magnet Cup*.....99K32.53

### SCRATCH STOCK (P. 24)

• **Lee Valley**
*Cutter Set* ..... 05P04.10
• **Lie-Nielsen**
*Beading Tool Blades*.. 1-BL-66-SET
• **Woodcraft**
*Red Mahogany Dye*.....828382
*Dk. Vintage Maple Dye*.....821825

### HAND PLANE (P. 28)

• **Highland Woodworking**
*1½" Hock Iron Set*.....122509

### HANDSAW MITER BOX (P. 36)

• **Lee Valley**
*1⅛" Knob w/Stud*..... 00M51.02
*¼"-20 Threaded Inserts*. 00M90.01
*4" x 24"- ¾" UHMW* ..... 46J90.14

### MITER SQUARE (P. 42)

• **McMaster-Carr**
*Brass Rivets*.....96082A200
*Machinable Brass* .....8954K144
• **Pulsar ProFX**
*Transfer Paper* .....1102
*GreenTRF Foil*.....1225
• **Amazon**
*Ferric Chloride* .....B005T8Y20W

The miter square handle was finished with two coats of lacquer.

### MARKING KNIFE (P. 46)

• **Japan Woodworker**
*Right Bevel Blade* .....RH-156627
*Left Bevel Blade* .....LH-156325

Be sure to have the blades in hand before you cut the grooves in the handle to size. Blade widths can vary slightly, so if you have the blade before you start you can cut the groove to fit perfectly.

### LAYOUT TOOL (P. 50)

• **Lee Valley**
*1¼" Knob* ..... 00M55.05
*1" Knob*..... 00M55.01
*¼"-20 T-Slot Nut* ..... 05J21.15
*¼"-20 T-Track* .....12K79.22

### CALIPERS & DIVIDERS SET (P. 54)

• **McMaster-Carr**
*Precision-Ground Steel*....9517K17
*Disc Springs*.....9712K412
*Brass Flat Rivets* .....97500A180
• **Essentra Components**
*Knurled Thumb Screw* ..... AJ-521
*Blue Layout Fluid*..... DX-100-4

The jaw liners (with extensions) shown in the article are available from McMaster-Carr (copper or aluminum) in a variety of sizes to fit your vise.

### BENCH VISE (P. 68)

• **McMaster-Carr**
*1"-6 Acme Rod*.....98935A748
*1"-6 Acme Nut* ..... 94815A111
*1" Washer* .....98029A038
*⅝"-8 Acme Rod* .....98935A724
*⅝"-8 Acme Nut*.....94815A108
*⅝" Washer*.....98029A035
*¾"-10 Hex Bolt* .....91236A861
*¾"-10 Hex Nut* .....93827A259
*Cotter Pin*.....98338A230

### SHOOTING BOARD (P. 76)

• **McMaster-Carr**
*½" x ¾" UHMW* .....8702K493
*¼" x 2" UHMW*.....8702K467
*¾" Studded Knob* .....6079K14
*1½" Studded Knob* .....6079K23
*1" Threaded Knob* .....6333K2
*⅜" Black Washer* .....92140A118
*¾"-dia. Steel Rod*..... 5227T282

### SHARPENING PLANE IRON (P. 96)

• **Rockler**
*1000/6000 Waterstone*.....47506

# Woodsmith®

WOODSMITH BEST SELLING

## Discover More Great Books

from the publisher of
*Must-Have Hand Tools*

**Digital-only** versions also available
**Only $7.95!**

See these and more *Woodsmith* books at
**WoodsmithLibrary.com**

## FREE Woodsmith® eTIPS

- **Valuable Video Tips** from the Woodsmith Shop TV Show
- **Quick & Easy Printable Tips** from Woodsmith Magazine
- **First Look at New Products** — Including Woodsmith Video Plans

**WoodsmithTips.com**

# 2-in-1 Trammel

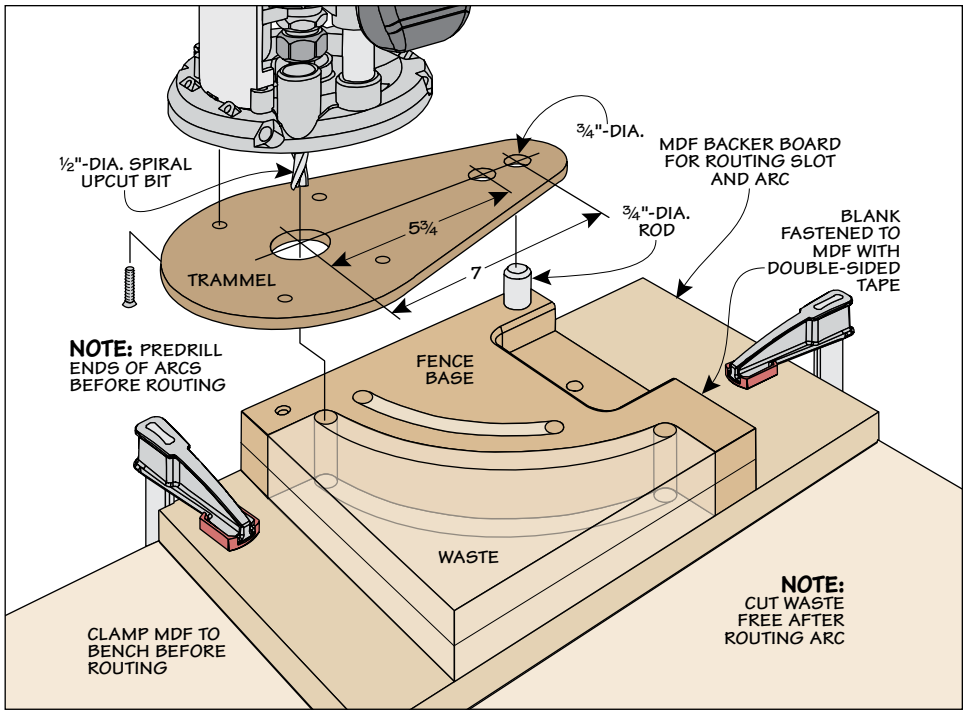


Cutting the curved outer profile and slot on the fence base for the shooting board is easy to do with a trammel and a plunge router. The trammel is just a piece of hardboard fastened to the base of the router.

I first drilled a ¾"-dia. pivot hole in the glued-up blank for the fence base and installed a length of steel rod. This becomes the pivot point for the trammel.

The trammel has two corresponding holes — one for cutting the outside arc and another for cutting the curved slot. These holes fit over the steel rod.

Before routing the blank, I predrilled the ends of the two arcs with a ½"-dia. bit. To protect my benchtop when routing, I fastened the blank to an MDF backer board with double-sided tape. Simply clamp the MDF to your bench before firing up the router.

To get the best results when cutting through the thick blank, I recommend using a spiral upcut bit. It removes chips faster. And you'll want to make several passes no deeper than about ¼" per pass. Routing direction really doesn't matter here since the cuts are internal.

After routing the slot and outside curve, remove the blank from the MDF backer board and head over to the band saw. A couple of quick cuts are all you need to remove the waste and form the tabs at the corners of the fence base.


©2017 Cruz Bay Publishing, Inc. All Rights Reserved.

ONLINE EXTRAS

# tri-fold
# Drill Bit Index

The full-size patterns on the following pages will help you shape all of the parts for the drill bit index. When printing the patterns, you need to make sure they print actual size. Sometimes, the print settings are set to "Print to Fit." Depending on your printer, you'll need to turn scaling off and select the option to not scale the print ("None"), "Print Actual Size," or "100%."

After printing the patterns, use spray adhesive to attach them to flexible plastic such as High-Impact Polystyrene (HIPS). Use scissors and a knife to cut the patterns from the plastic to use on the project parts. Then fasten the plastic patterns on the blanks with double-sided tape.

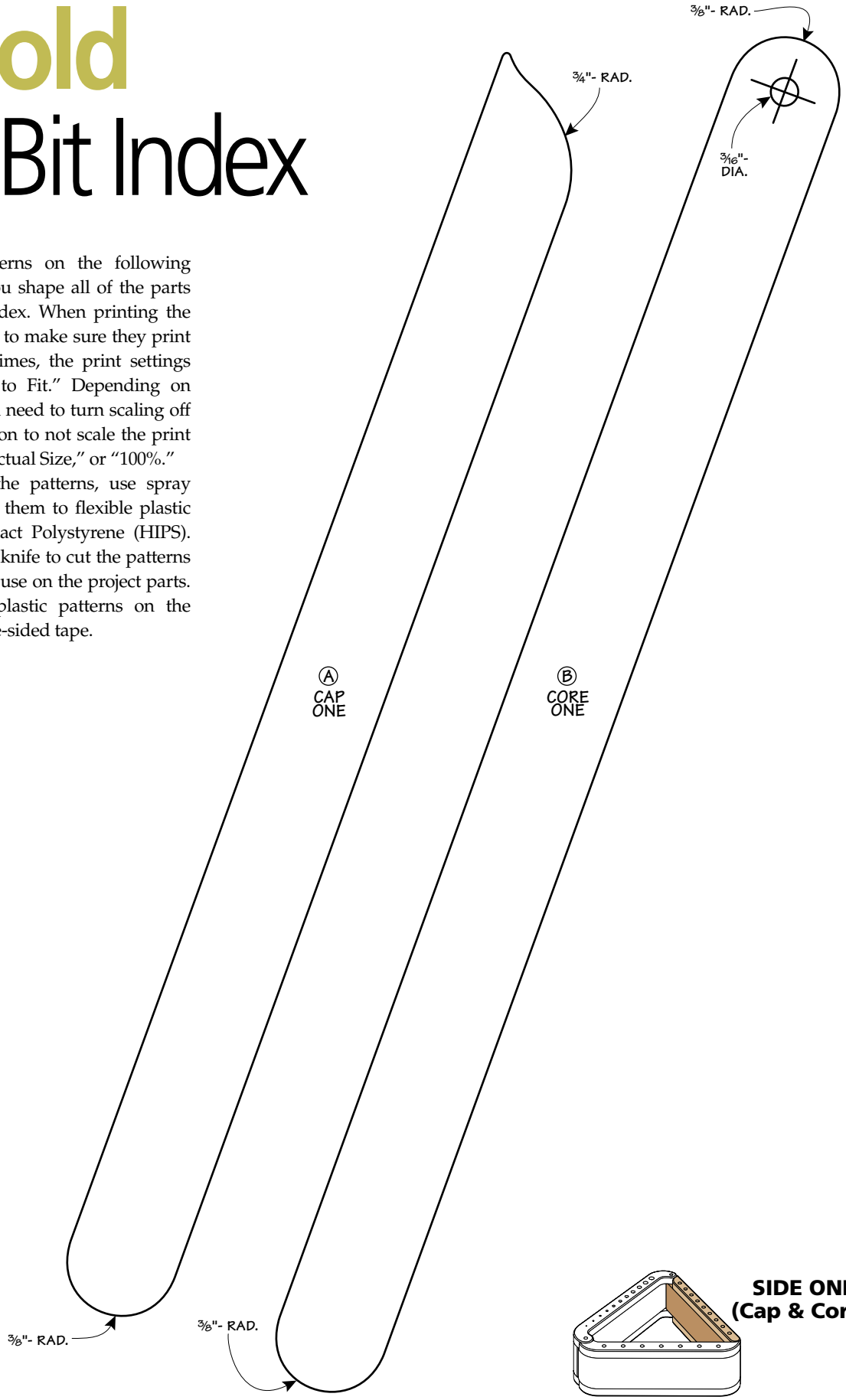




**SIDE ONE (Cap & Core)**


©2017 CRUZ BAY PUBLISHING, INC. ALL RIGHTS RESERVED.

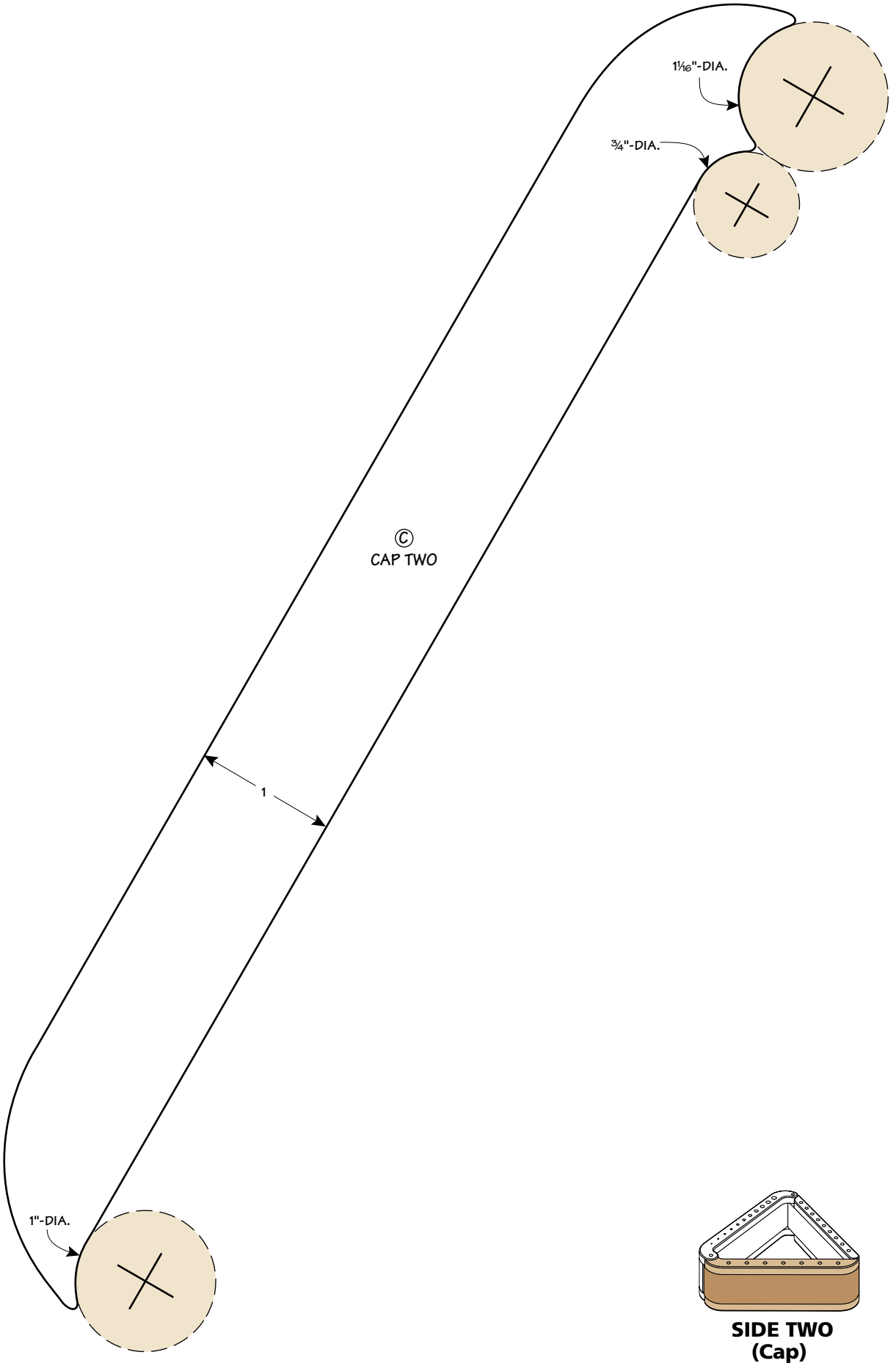




**SIDE TWO**
**(Cap)**


©2017 CRUZ BAY PUBLISHING, INC. ALL RIGHTS RESERVED.

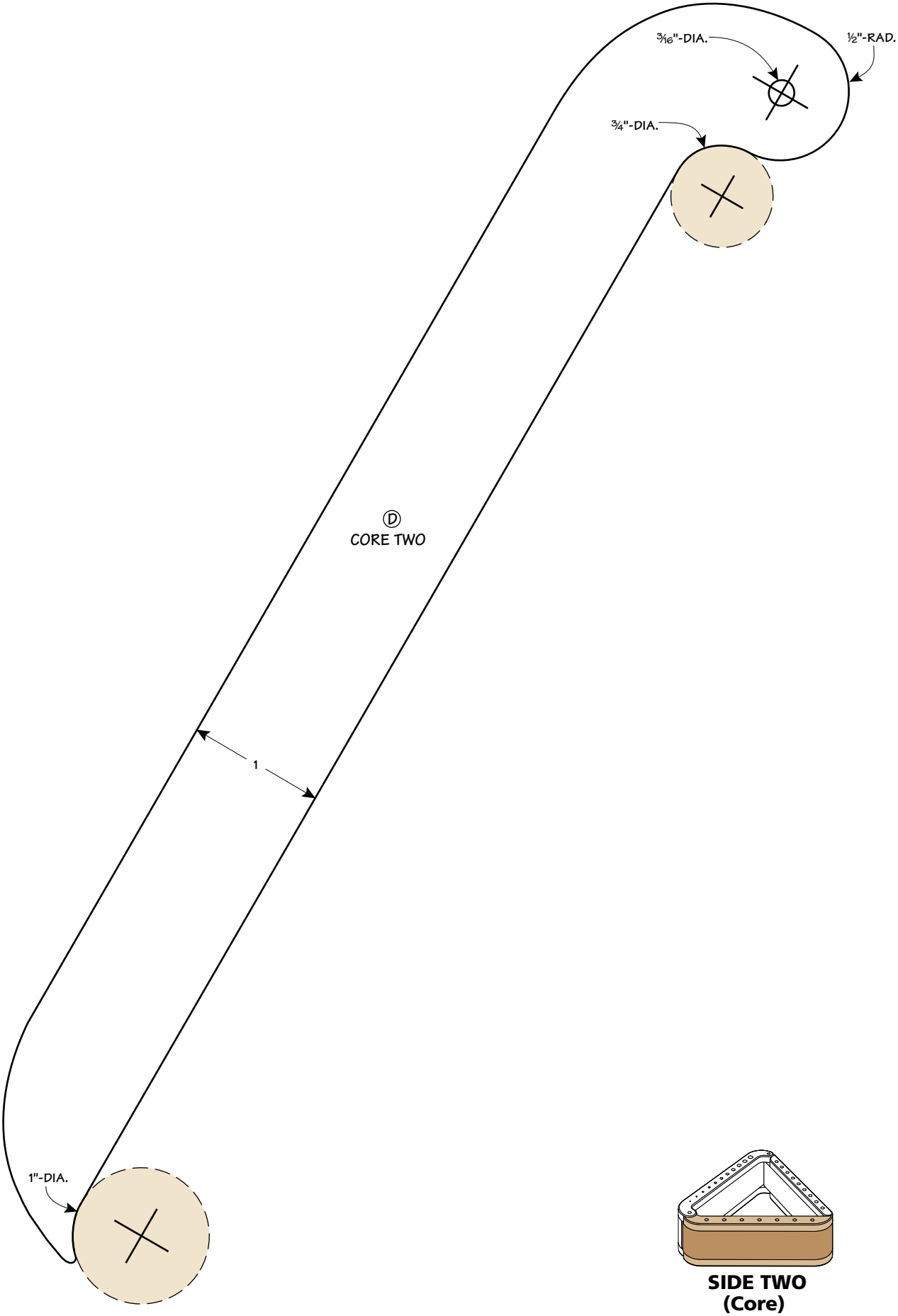




**SIDE TWO**
**(Core)**


©2017 CRUZ BAY PUBLISHING, INC. ALL RIGHTS RESERVED.

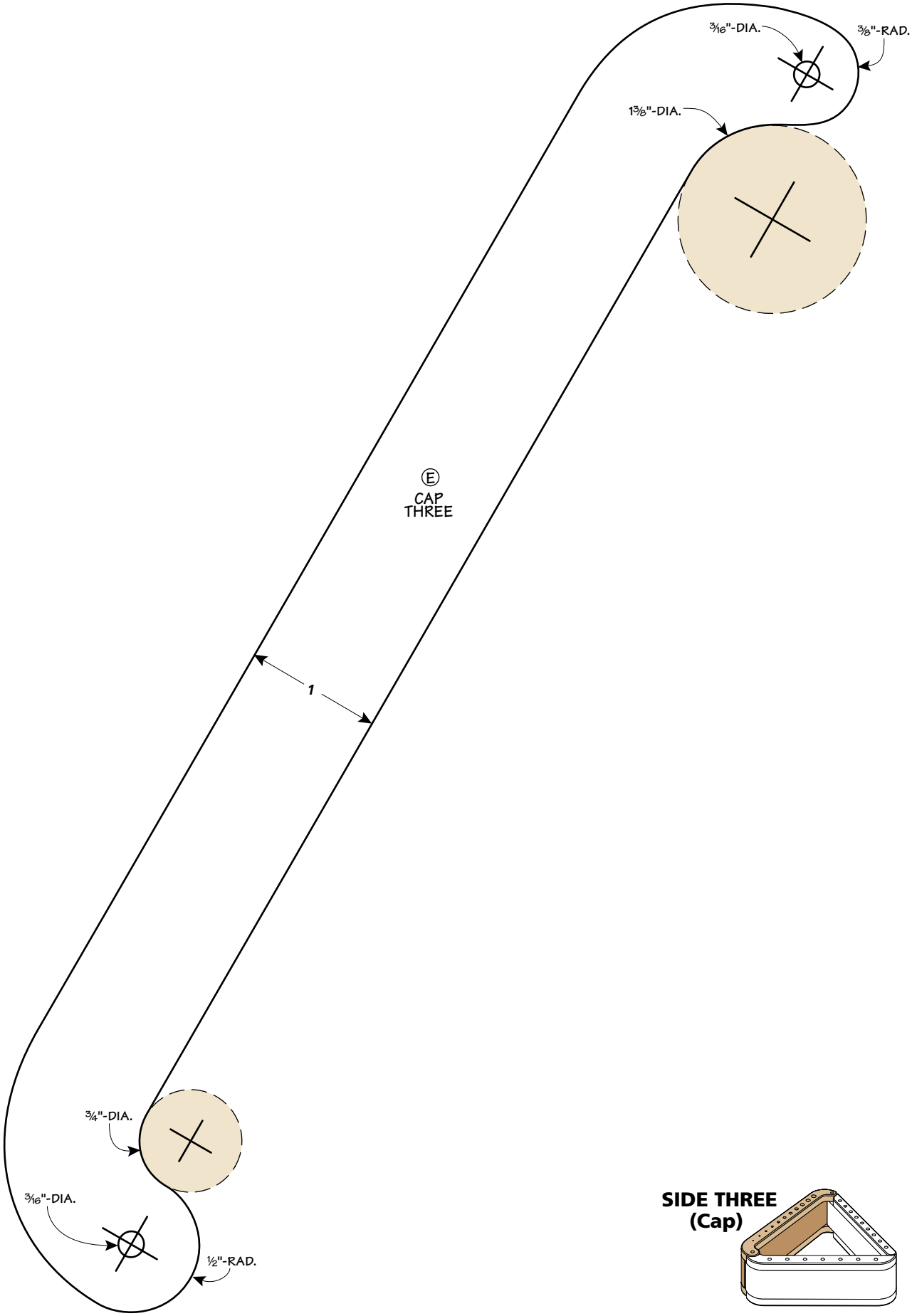


**SIDE THREE (Cap)**




©2017 CRUZ BAY PUBLISHING, INC. ALL RIGHTS RESERVED.

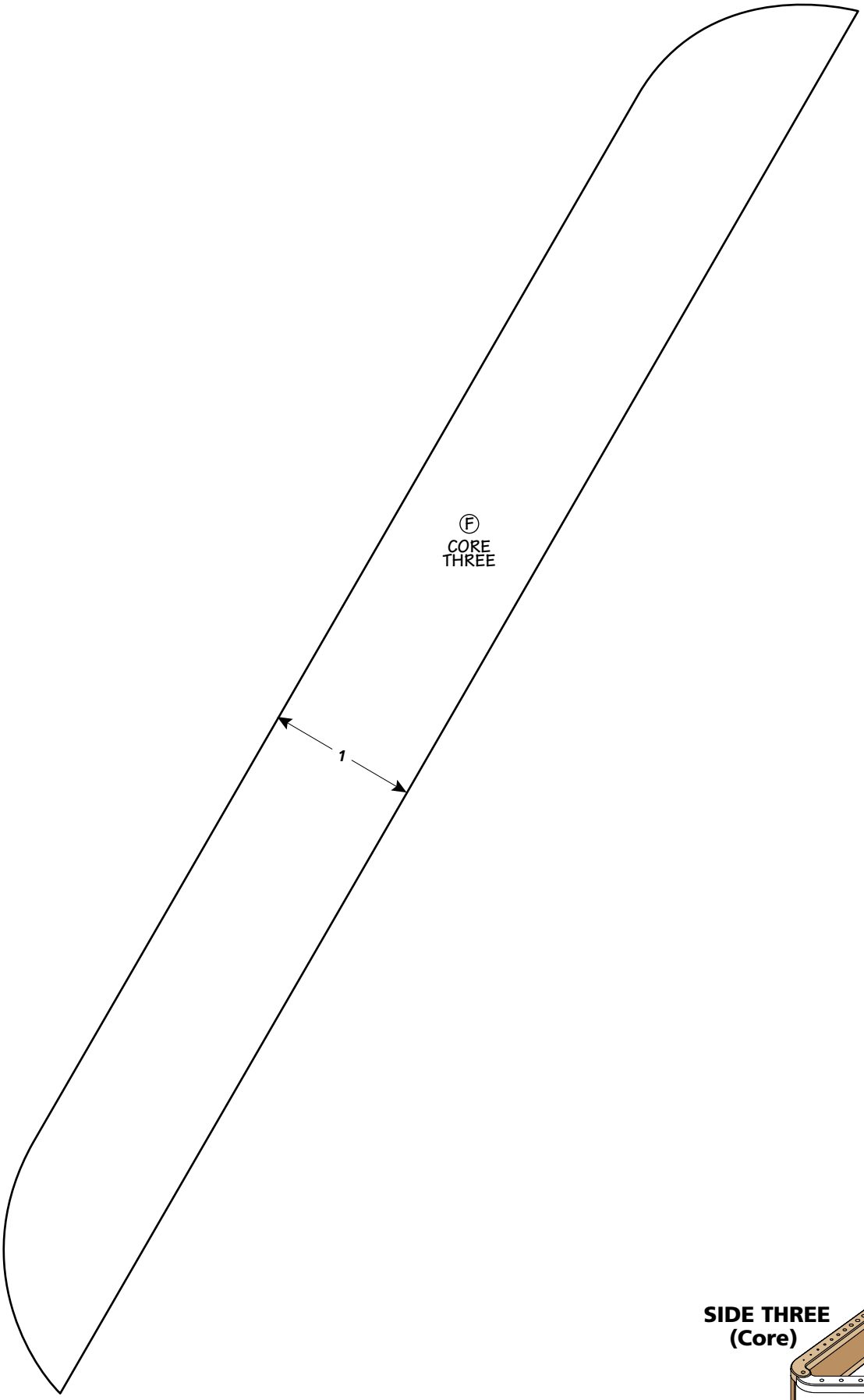


**SIDE THREE**
**(Core)**

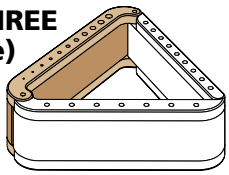


©2017 CRUZ BAY PUBLISHING, INC. ALL RIGHTS RESERVED.

# counterbore Alignment

Centering and drilling a counterbore on the saw handle after the pilot hole has been drilled can be tricky. Here's the solution.

Clamp a piece of plywood to the drill press table and drill a hole to match the diameter of the pilot hole. Insert a short piece of dowel to serve as a locator pin. Place the saw handle over the pin to automatically center the counterbore (drawing at right).

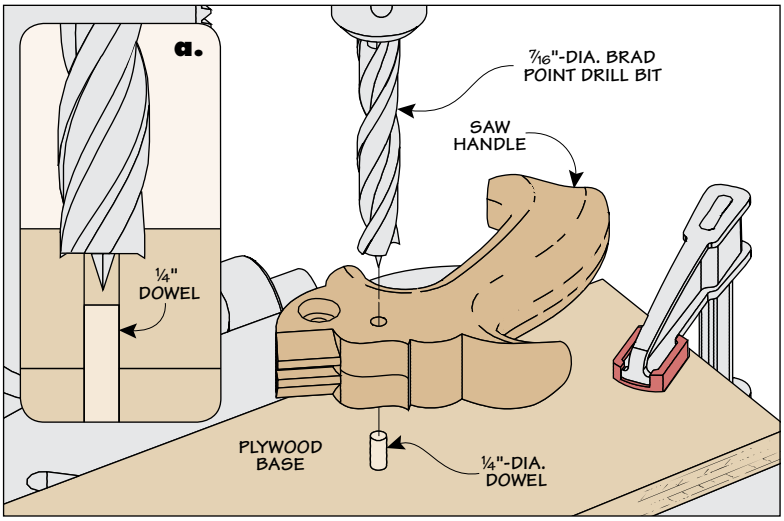


# shop-made Saw Nut

When fastening the handle of the back saw to the blade, I looked around for a fastener that matched the diameter of the head of the brass bolt. A knurled, brass nut from the hardware store had the right diameter, but I needed to make a couple of modifications.

**DRILL & TAP.** First, the threaded hole in the nut was too small for the bolt. So I needed to drill and tap threads to match the 1/4"-20 bolt. The drawing and photos step you through the procedure.

The first step requires drilling a hole in a piece of scrap to match the diameter of the knurled nut head. After tapping the nut into the hole upside down (Step 2), drill through the nut with a 3/16"-dia. bit in preparation for tapping the larger threads, as you can see in Steps 3 and 4.

**A SMALLER NECK.** The final modification requires a little bit of filing. The neck at the bottom of the nut needs to be filed down to fit into the pilot hole in the saw handle. But holding the nut securely while you do this can be a challenge. Instead, I used the drill press to shape the neck, as you can see in Step 5.

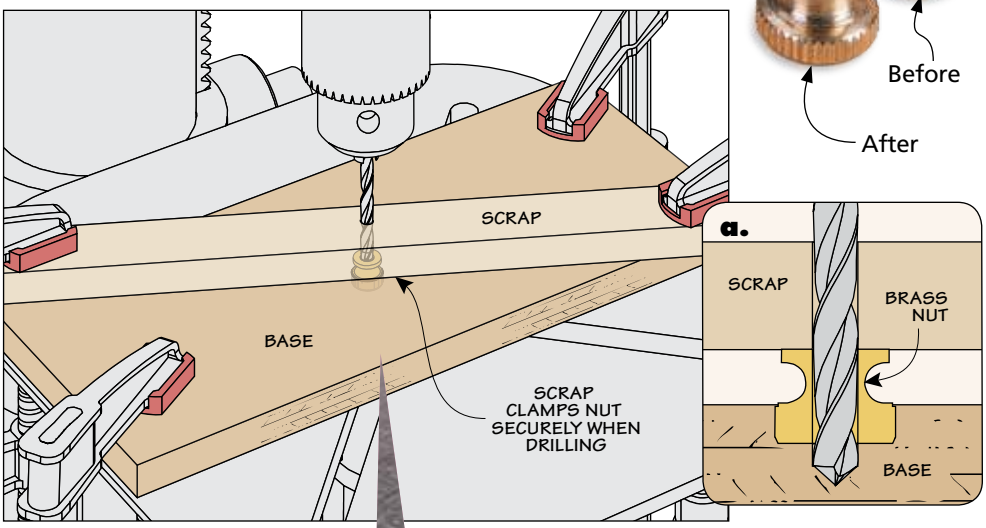


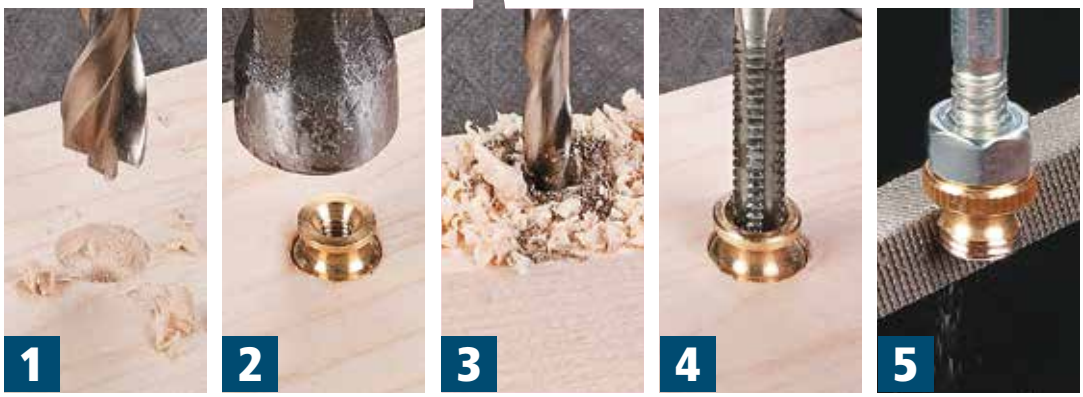


To securely mount the nut, I used a bolt with the head cut off. Step 5 shows how a hex nut serves as a jam nut to keep the brass nut from spinning off the bolt as you file down the diameter of the neck.

With your drill press running at its slowest speed, gently place the file against the spinning nut and work the file over the nut. Finish up with some fine sandpaper to remove the rough edges.


©2017 Cruz Bay Publishing, Inc. All Rights Reserved.

ONLINE EXTRAS

# full-size pattern Back Saw Handle

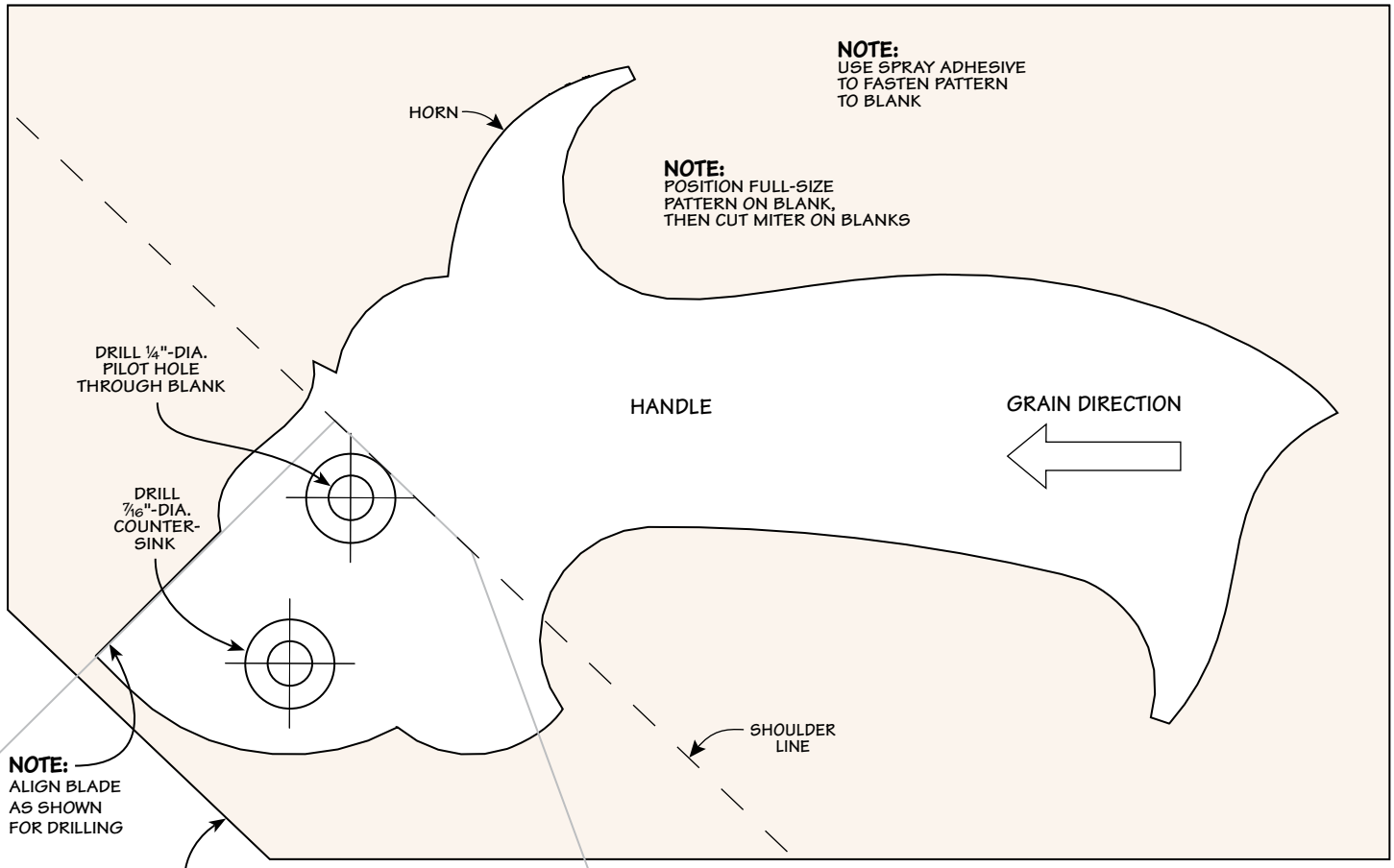


**Pattern for Handle.** To use this pattern to make your saw handle, make sure your software's "Page Scaling" setting = None (100%).


©2017 CRUZ BAY PUBLISHING, INC. ALL RIGHTS RESERVED.

# **infill** Smoothing Plane

Save time and effort with these patterns for making the steel sides and the hardwood tote and cheeks.

All of the parts for the infill smoothing plane feature curves or irregular shapes. You can eliminate quite a bit of layout time by using the full-size patterns on these two pages.

**SIDE PATTERN.** To make the steel sides, I printed two copies of the pattern below. One is used to make a hardboard template. And the other is used as a guide for drilling all the holes.

**REAR INFILL.** You'll only need one pattern to cut out and shape the tote. When making the cheeks, keep in mind that they end up as mirror images. So the pattern is only used to cut the final shape.

## SIDE PATTERN (SHOWN ACTUAL SIZE)

1 SQUARE = ¼"

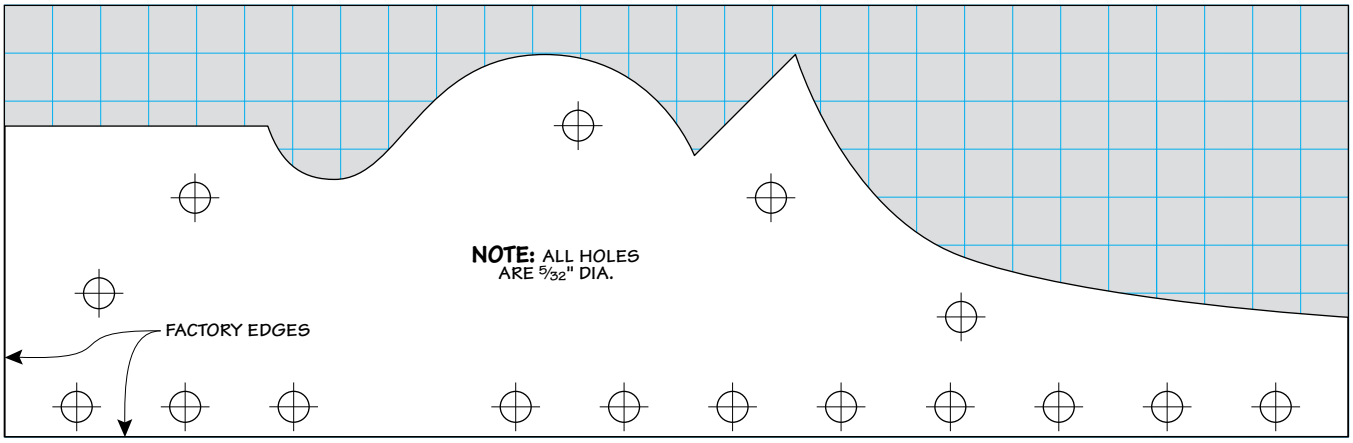



©2017 CRUZ BAY PUBLISHING, INC. ALL RIGHTS RESERVED.

## TOTE PATTERN (SHOWN ACTUAL SIZE)

1 SQUARE = ¼"

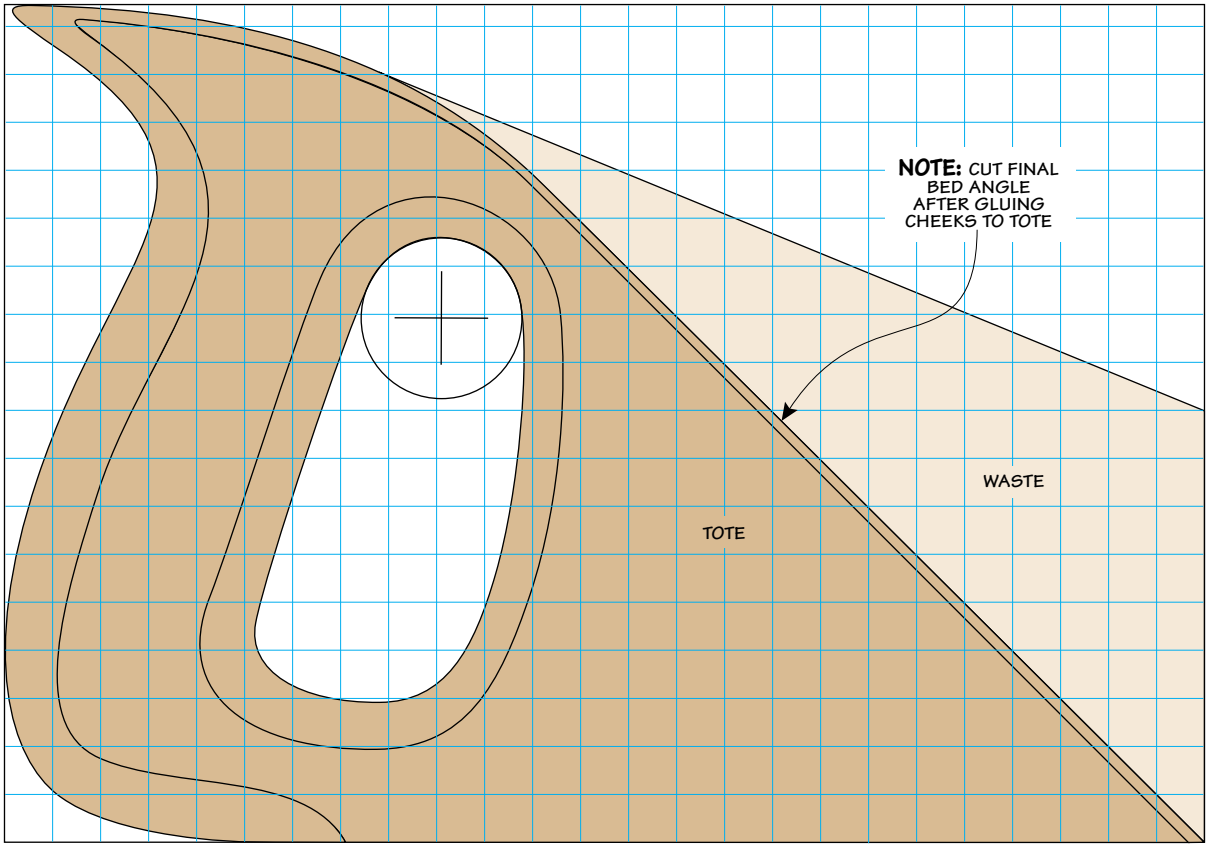


## CHEEK PATTERN (SHOWN ACTUAL SIZE)

1 SQUARE = ¼"

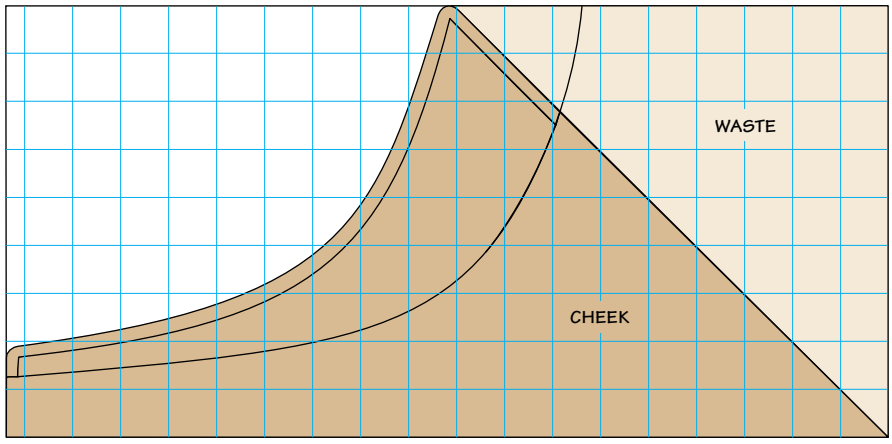



©2017 CRUZ BAY PUBLISHING, INC. ALL RIGHTS RESERVED.

# making a Handle Cap

Even though they're small parts, the handle caps for the vise offer some unique challenges. One of those is giving them a gentle, barrel shape.

In order to keep the profile smooth and even, I "turned" each cap at the drill press using a file, as shown in the upper right photo. The trick is holding the cap securely while still being able to easily remove it later. The solution begins by jamming it onto a short section of ¾"-dia. dowel. To install this assembly in the drill press, I threaded a cut-off screw in one end of the dowel, as shown in Figure 3.

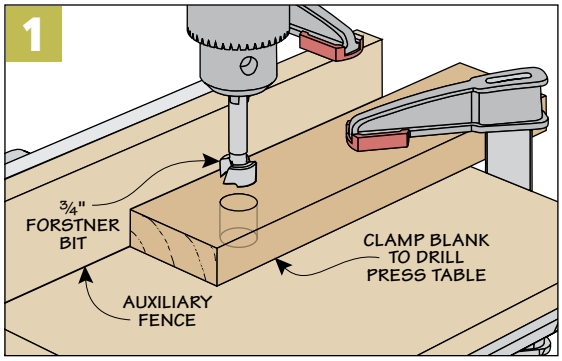


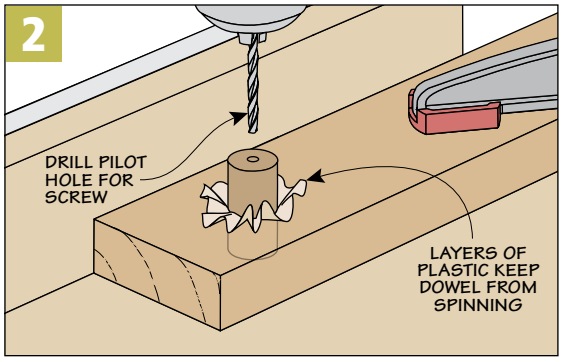


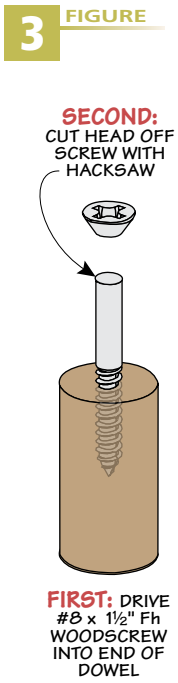


This screw needs to be perfectly centered for the dowel to spin true and create an even shape. You can see this in Figures 1 and 2. First I drilled a hole in a scrap to accept the dowel. Then, without moving the blank, insert the dowel in the hole and drill a pilot hole for the screw.

To keep the dowel from spinning, I lined the hole with some plastic from a grocery bag. After driving the screw into the dowel, you can cut the head off with a hacksaw and install the assembly in the drill press.

Here again, to keep the cap in place, I wedged a few layers of plastic between the cap and dowel, as shown in the upper left photo. I trimmed away the excess plastic with a utility knife before starting the drill press.

Shaping the cap is as simple as holding a file against the cap as it spins. In a short time, you'll have a pleasing shape.


©2017 Cruz Bay Publishing, Inc. All Rights Reserved.

# laying out a Hexagon

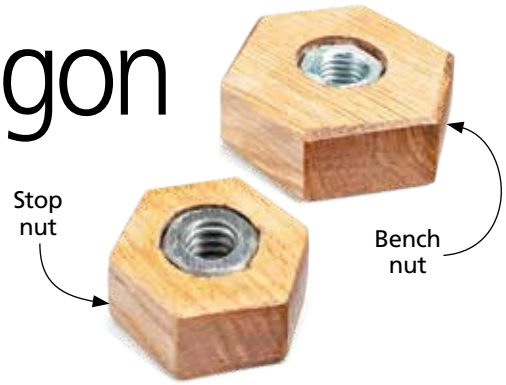


The large wood bench and stop nuts used on the bench vise (shown in the photo at right) are more comfortable to operate by hand than steel hex nuts. And I found they're pretty simple to make. However, there is a definite order to follow to get a consistent shape.

It starts by cutting an extra-long blank for each nut. I cut the blank to the final width of the nut across the flats. This creates two finished sides right off the bat, as illustrated in the drawings below.

The next step is to mark a centerline on each blank.

Then you can set a compass to the radius given for each nut and draw a pair of arcs. Where the arcs, centerline, and sides intersect forms the points of the nut. Once you connect the points with a straightedge, you'll have the final shape of each nut.

Before cutting the nut to shape, it's a good idea to drill the counterbore to accept the steel nut and a through hole for the Acme rod.

The large blank is easier to secure at the drill press. After that, cut out the nut at the band saw staying just on the waste side of the lines. And finally, you can sand each nut smooth.

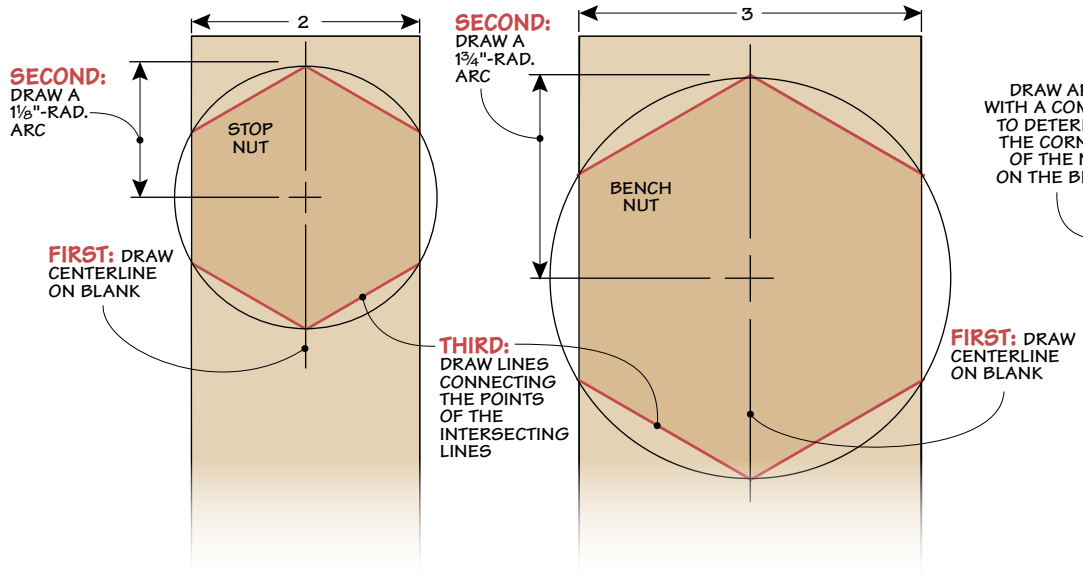


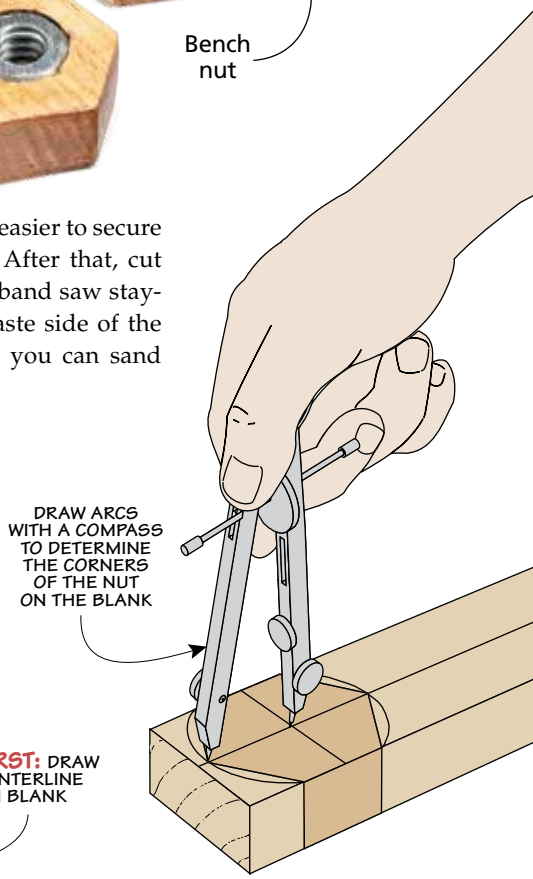



©2017 Cruz Bay Publishing, Inc. All Rights Reserved.

# groove routing Hinges

The miter square has shallow finger grips on both sides of the handle. A 1"-dia. core box bit in a hand-held router, aided by the jig shown at right, works perfect for making these grooves. I sized my jig for a 5⅞"-dia. router base. Adjust the dimensions to suit your router.

This guide is simple to set up. The oversized handle blank is clamped to the workbench, surrounded by two base pieces and a small stop. The rails and spacers are glued together. With the guide rail assembly clamped in place (Figure 1), rout from end to end and side to side to form the groove.

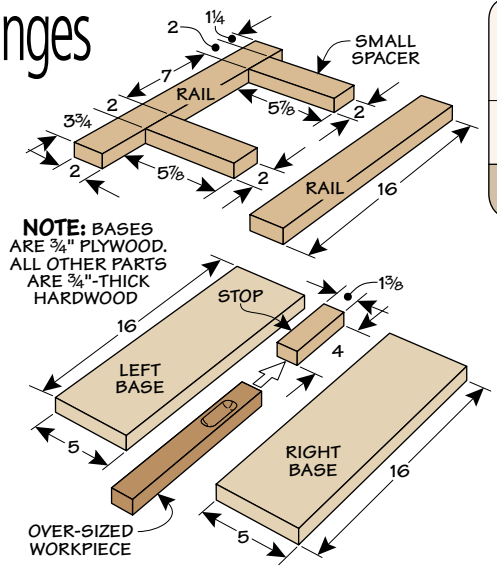


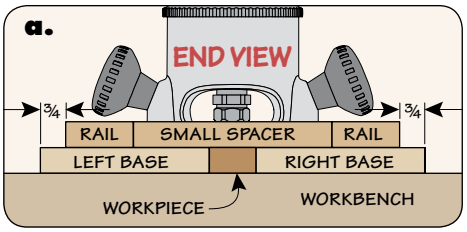


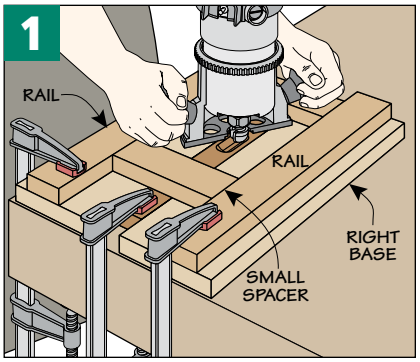


# miter square Cradle

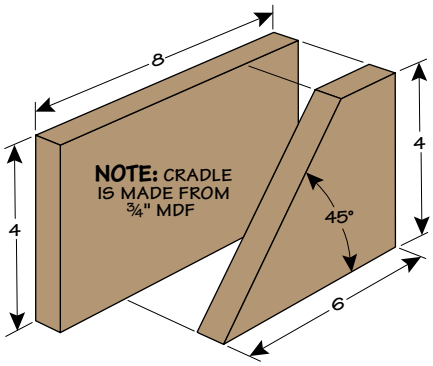


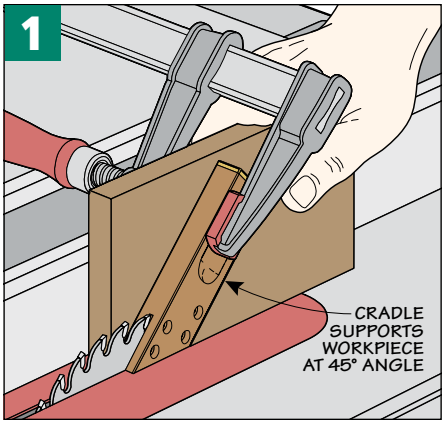


The miter square also requires a slot on the end to house the brass blade. But because the end of the square is mitered at 45°, some support is needed to pass the handle over the saw blade. I quickly created this simple cradle to support the workpiece at the proper angle. With the height of the saw blade set, clamp the handle to the cradle and pass the whole assembly over the blade.


©2017 Cruz Bay Publishing, Inc. All Rights Reserved.

# notched Sled

The easiest way to make the beveled channel on the toe plate of the scraper shaves is to use a sled, as shown in the photo and the left drawing below. The sled is held against an auxiliary fence on the miter gauge and positions the toe plate at a 20° angle. Then, you make multiple passes over a dado blade to cut the channel.

On the flat-bottom and large-radius shaves, I made a slightly deeper channel (photo at right). For the chamfer and the small-radius shaves, lower the dado blade 1/16", as shown in the center drawing.

In order to cut the channels safely, I used an extra-long blank to make two toe plates. And, I held it in place with a piece of scrap.

**CUT CHANNEL.** To use the sled, lay out the channels on the blank. With the blank in place, raise the blade to sneak up on the final depth. After nibbling away the waste, clean the channels up with a chisel. Finally, cut the toe plates to size from the blank.

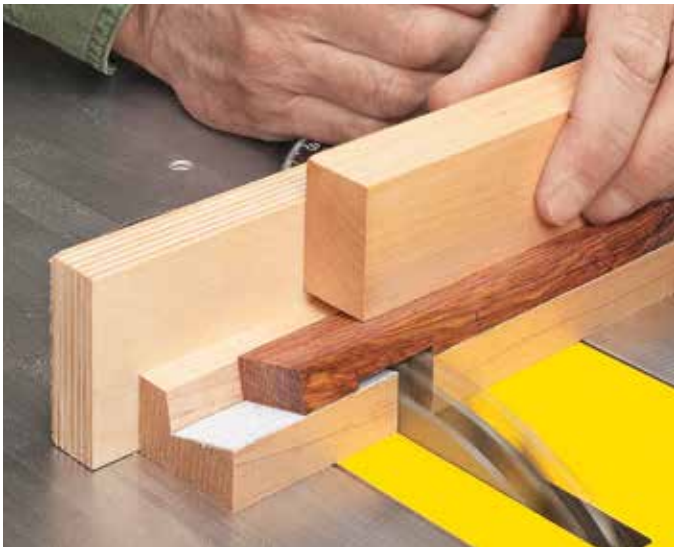

**Setup.** A sled is used to safely cut the channel in the toe plate blank. A scrap block holds it in place.

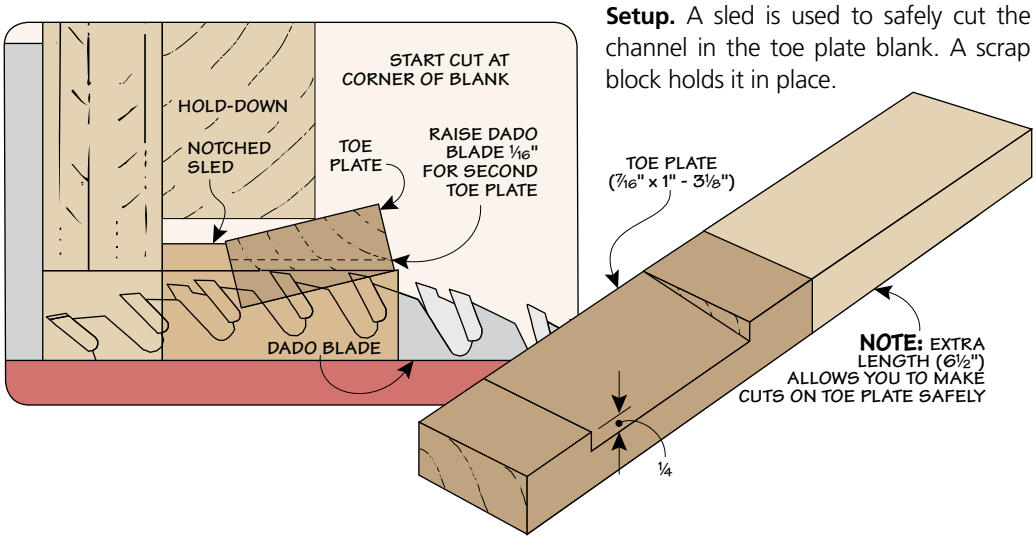



©2017 CRUZ BAY PUBLISHING, INC. ALL RIGHTS RESERVED.

ONLINE EXTRAS

# scratching a Perfect Profile

All it takes is a few, simple steps to create one-of-a-kind profiles with a scratch stock.

Adding a decorative profile is one way to make a project stand out. And even though there are a wide variety of router bits available, when I want something really unique or special, I like to make the profile with a scratch stock. A scratch stock is nothing more than a holder for a thin steel cutter that's shaped to match the profile you wish to create. It doesn't take long to master the technique for using this traditional tool.

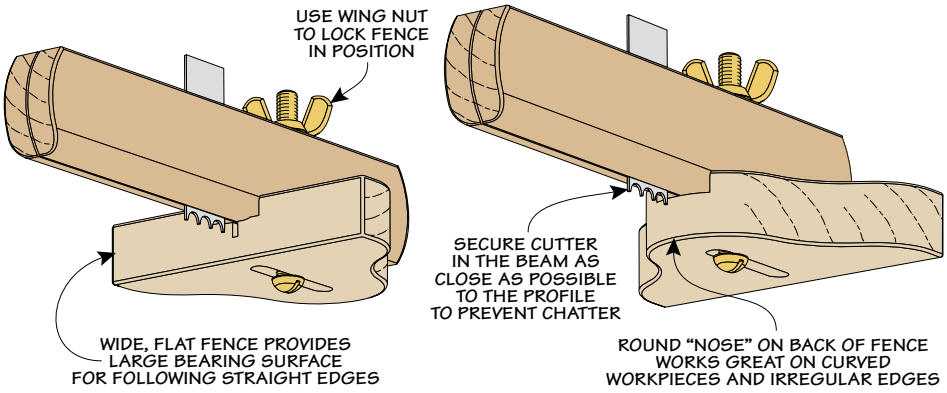


**FENCE ORIENTATION.** Getting the hang of using a scratch stock to create a profile starts with setting it up properly. One of the first things to look at is the fence. For the scratch stock shown here, you can choose the right fence position to match the task at hand.

The basic setup is shown in the far left drawing. The wide, flat fence makes it easy to hold the tool against the edge of a workpiece for creating a profile parallel to an edge, like reeds and flutes, for example.

When a workpiece is round (like a tabletop) or has an irregular edge, such as a table apron, the straight fence won't work. The solution is to flip the fence around and use the round edge as the


©2017 Cruz Bay Publishing, Inc. All Rights Reserved.

fence, as you can see in the main photo on the previous page.

**CUTTER SETUP.** With the fence orientation selected, you can turn your attention to the cutter. You want to expose enough of the cutter so you can tilt the scratch stock to find the best cutting angle (more on this later), as in photo 1. But it shouldn't protrude so much that it chatters in use.

**FENCE POSITION.** The final step in setting up the scratch stock is setting the distance between the fence and the cutter (photo 2).

**Cutter.** Position the cutter in the beam to the desired depth and lock it securely by tightening the screws.

**Fence.** Set the fence to locate the profile. Then tighten the wing nut.

## CREATING THE PROFILE

Now that the scratch stock is set up, you're ready to put it to use. I want to start by going over the process of creating a profile along a straight edge. Then I'll offer some specific advice for following curved edges.

**BASIC PROFILES.** Like a card scraper, a scratch stock doesn't remove a lot of material with each stroke. The high-angle, scraping cut makes it impossible to cut a profile in one pass. Instead, several steady strokes work best. You can see the progression in the photos below.

I like to think of the first pass as a layout step. Use a light touch and the very tips of the cutter to score the workpiece, as shown in photo 3. These lines will guide the cutter like train tracks.

**TWO-HANDED GRIP.** How you hold the tool will affect your results, too. The scratch stock is small enough that you could use it with one hand. But a two-handed grip will give you better results. Use one hand to keep the fence against the edge of the workpiece. Your other hand is the motor moving the tool along.

**MULTIPLE PASSES.** Following the first pass, you'll use the next few passes to shape the profile. You can apply increasing pressure to begin forming the profile (photo 4). For the cleanest cut, it helps to tilt the cutter slightly in the direction that it's moving.

Speaking of direction, the scratch stock will work either pushing or pulling. Try both ways to see which is more comfortable for you. The grain direction of a workpiece may also influence which way you need to tilt and move the scratch stock to get the cleanest profile.

**SCRAPE IT CLEAN.** The scratching process can sometimes leave the details of the profile a little fuzzy. So for the last pass or two, it helps to run the cutter vertically across the profile with light pressure (photo 5). This cleans up any rough spots and clears out stubborn shavings.

**CURVES.** The biggest difference between scratching profiles on straight edges and curves is the types of strokes you take. On curves, I find that short back-and-forth strokes work best. In addition, you need to pay particular attention to keeping the fence of the scratch stock perpendicular to the edge of the workpiece.

The results of your efforts will be a unique, hand-crafted profile that can't be matched.

**First Pass.** On the first pass, lightly score the workpiece. Concentrate on keeping the fence aginst the edge.

**Multiple Passes.** Tilt the scratch stock as you draw it across the workpiece with each pass to form the profile.

**Cleanup.** Use a light touch on the final pass to clean up the profile and remove waste from the creases.


©2017 CRUZ BAY PUBLISHING, INC. ALL RIGHTS RESERVED.

# scratch stock Finish

I wanted to add some color and bring out the figure of the curly maple used to make the scratch stock. To do this, I used a mixture of two concentrated dyes (for sources, turn to page 98). I added 15 drops of TransTint's Red Mahogany and 20 drops of Dark Vintage Maple to three tablespoons each of lacquer thinner and denatured alcohol (near right photo). This solvent combination won't raise the grain of the wood and doesn't dry so fast that leaves lap marks.

After mixing, just flood it onto the wood with a rag or brush (far right photo). When it dries, the surface will look dull and chalky. Don't worry, a couple coats of wipe-on varnish will make the color come to life.


©2017 Cruz Bay Publishing, Inc. All Rights Reserved.

ONLINE EXTRAS

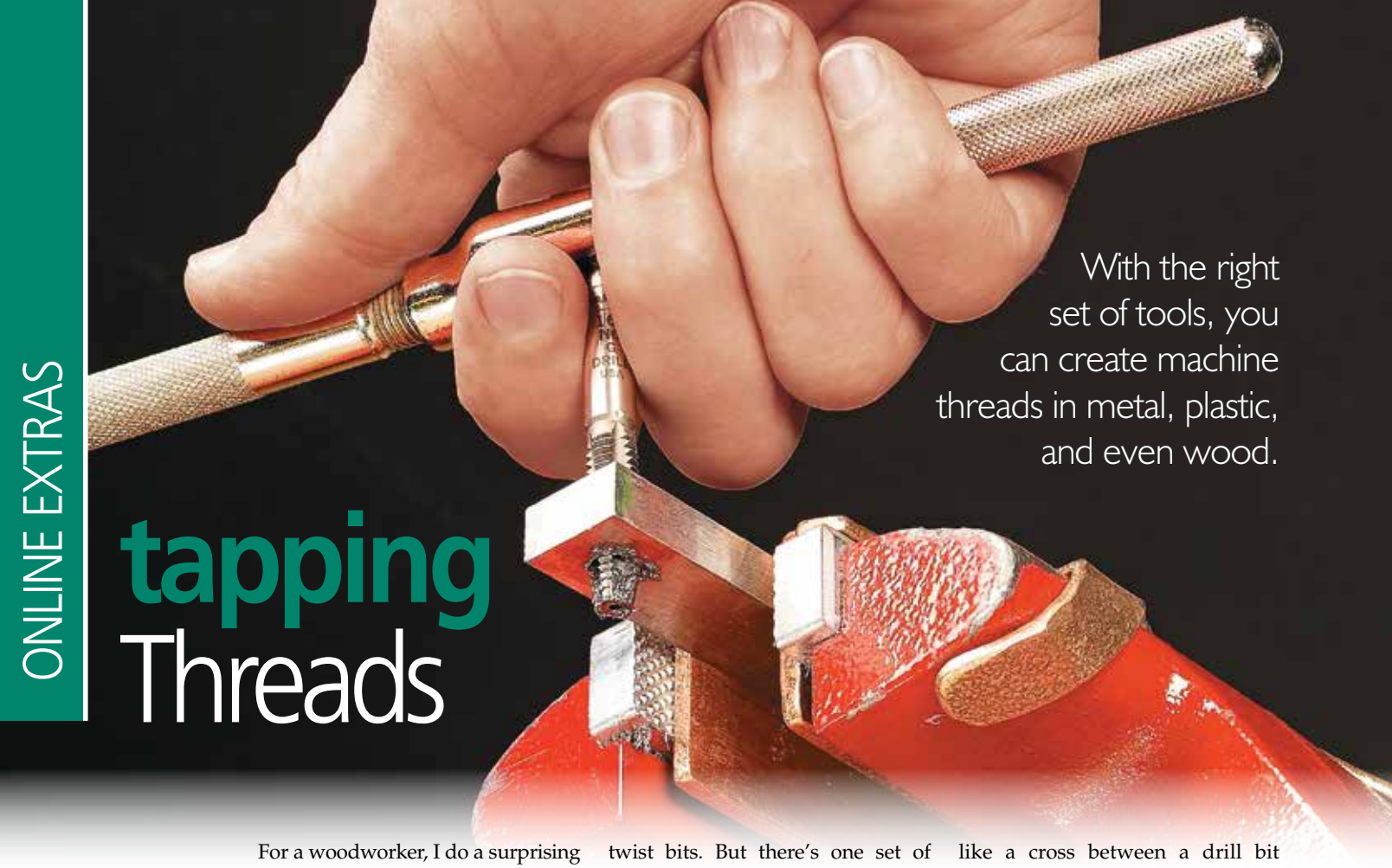

With the right set of tools, you can create machine threads in metal, plastic, and even wood.

# tapping Threads

For a woodworker, I do a surprising amount of work with metal. This can be as simple as adding T-track to a shop jig, modifying a piece of hardware, or making tools like the compass, calipers, and dividers.

To accomplish some of these tasks, I have a collection of metal-working tools and accessories that includes a hacksaw, a few files, and twist bits. But there's one set of accessories that I consider a must-have — metal-threading taps. These allow me to add machine screw threads to a piece of metal so that it can serve as a nut or an anchoring point for assembling parts.

**HOW IT WORKS.** In the photo below, you can see several taps and a pair of tap wrenches. A tap looks like a cross between a drill bit and a machine screw. But instead of drilling a smooth-sided hole, it cuts precise threads on the inside a pre-drilled hole.

The size of the pilot hole you need is stamped on the shank of the tap. Unlike a screw, the "threads" on a tap are separated by gullets that form the edges of the threads. This reduces friction while cutting threads. And it provides clearance for the metal chips that form during the process.

Cutting threads by hand must be done carefully to avoid breaking the tap. The wrenches grip the square shank of the tap and let you twist the tap into the pilot hole.

**BUILD YOUR OWN SET.** You can buy a large tap and die set at a hardware store or home center. (For more on dies, take a look at the box on the opposite page.) A full-size set is ideal for an auto mechanic or metalworker. But for a woodworker, it seems like overkill.

A better solution in my opinion is to build your own set. You can purchase high-quality, individual taps for just a few bucks. The main

## A Tap Set For Woodworkers

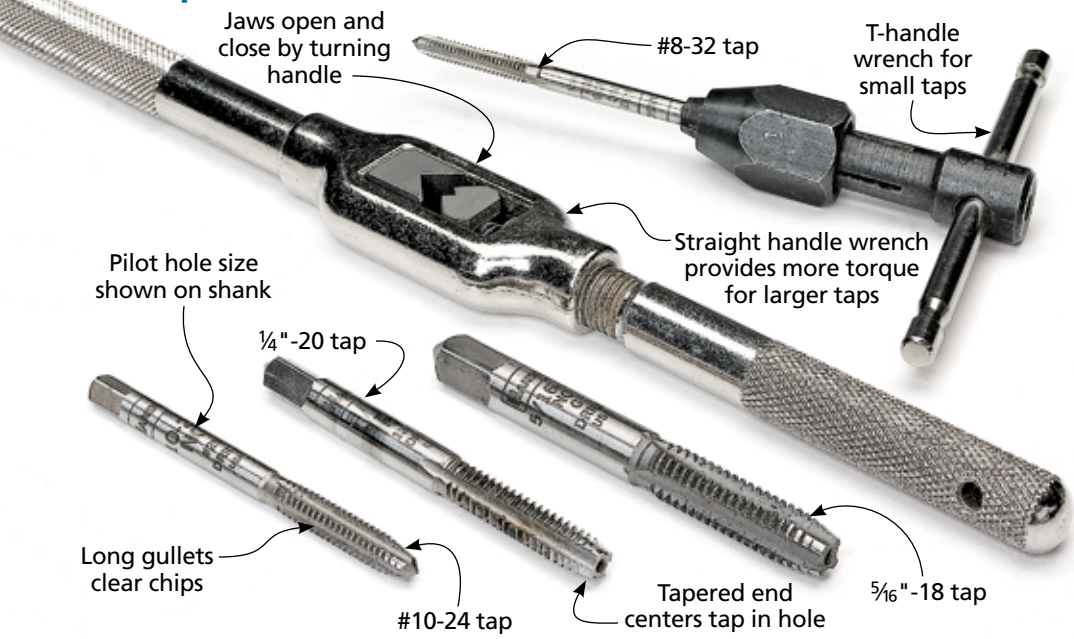



©2017 CRUZ BAY PUBLISHING, INC. ALL RIGHTS RESERVED.

benefit to this is that you buy only what you need, when you need it. Since I typically use a few common machine screw sizes, my "set" consists of the four taps shown in the photo. Having two wrenches allows you to get the right amount of torque to suit the material.

### TAPPING THREADS

Cutting threads in metal is an essential skill that's easy to master. Once you do, you'll find numerous occasions when adding threads is useful. I've even found that you can tap threads in plastic and dense hardwoods like maple, white oak, and tropical woods.

The photos at right do a good job of highlighting the major steps in the process. But I want to add a few key points that will help you get the best results.

**LAYOUT.** The first step in the process is laying out the location of the threaded hole. After marking this with a pencil or scribe, I use a spring-loaded punch to make a dimple for the bit. This prevents the drill bit from wandering when it makes contact with the metal.

**PILOT HOLE.** Head to the drill press for the next step. What's important here is drilling a clean and properly sized hole square through the workpiece. To do this, set the drill press to a slow speed and secure the workpiece with clamps and a fence, as shown in photo 1. Then to keep the workpiece from overheating and the bit cutting smoothly, I apply a few drops of light machine oil as I feed the bit.

Now, before picking up the tap, it's a good idea to chamfer the edge of the pilot hole. This deburrs the hole and lets the tap "bite" easier. This is shown in photo 2.

**CUTTING THE THREADS.** At last, you're ready to create the threads. Clamp the workpiece in a metal vise, and fit the tap to the wrench. As you start turning the tap into the workpiece, concentrate on keeping it square (photo 3).

You can feel the resistance increase as the tap bites into the hole. To avoid snapping the tap, don't try to tap the hole all at once. Instead, after every half turn, back off the tap a quarter turn. (Here again, adding some oil will reduce friction.) Repeat this two-step motion until you cut all the way through the workpiece.

Finally, run the tap down the hole a couple of times. This cleans up the threads and clears any shavings from the hole.

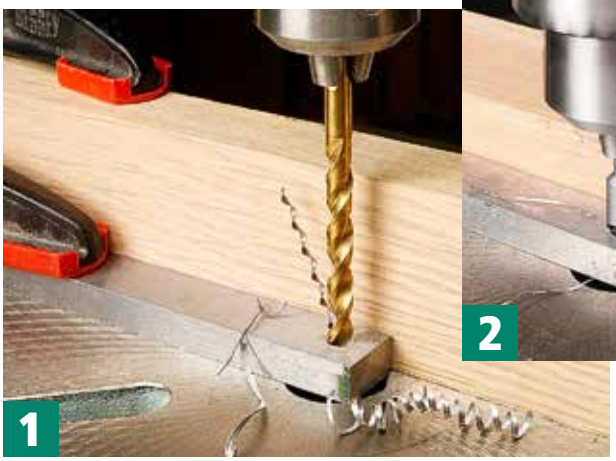

**Drill.** Drill the appropriate pilot hole at the drill press. Lubricate the bit with a few drops of oil.

**Chamfer**. A slight chamfer on the edge helps center the tap in the hole.

**Turn In & Back Off.** After each half turn, back the tap out a quarter turn to clear the waste.

## Restoring Damaged Threads

A tap cuts threads on the inside of a hole. To thread the outside of round stock, you use a die (far right photo).

As easy as it is to find screws, bolts, or threaded rod to suit my needs, I rarely need a die. But one place they come in handy is to quickly clean up damaged threads, as you can see in the right photo. The same "turn and back-away" process for using a tap works with a die, too. When starting a die, take care to align the teeth with the threads to prevent cross-threading.

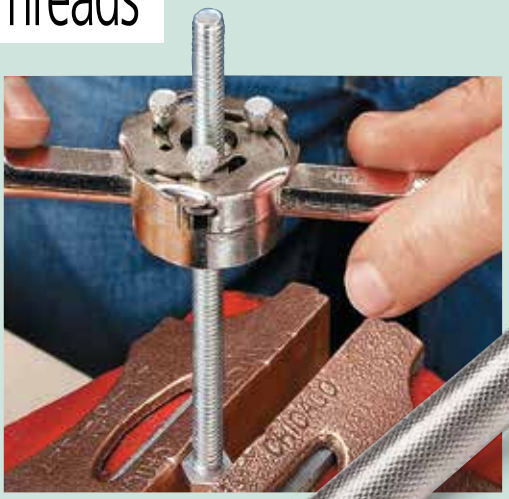

©2017 Cruz Bay Publishing, Inc. All Rights Reserved.

Get Your Online Triple Bonus at WoodsmithSpecials.com

# ONLINE TRIPLE BONUS!

## 1 10 Bonus Project Plans & Patterns

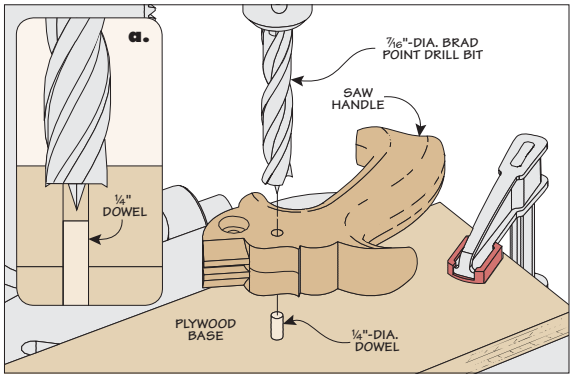


- Shop-Made Saw Nuts
- Aligning a Counterbore
- Making a Groove-Routing Guide
- Full-Size Patterns & More!

## 2 5 Free Technique Articles

- Scratching a Perfect Profile
- Essential Tools for Tapping Threads
- Finishing Secrets
- Making a Router Trammel, & More!

## 3 Free Weekly eTips!

**Delivered FREE by email every week!**

Woodsmith eTIPS

- **Video Tips** from the Woodsmith Shop TV Show!
- **Woodworking Tips** to Print and Save
- **Special Product Offers**

To get all your FREE bonus materials, go to **WoodsmithSpecials.com** and enter this access code

WS1801